GEM

Global Excellence in Microsurgery

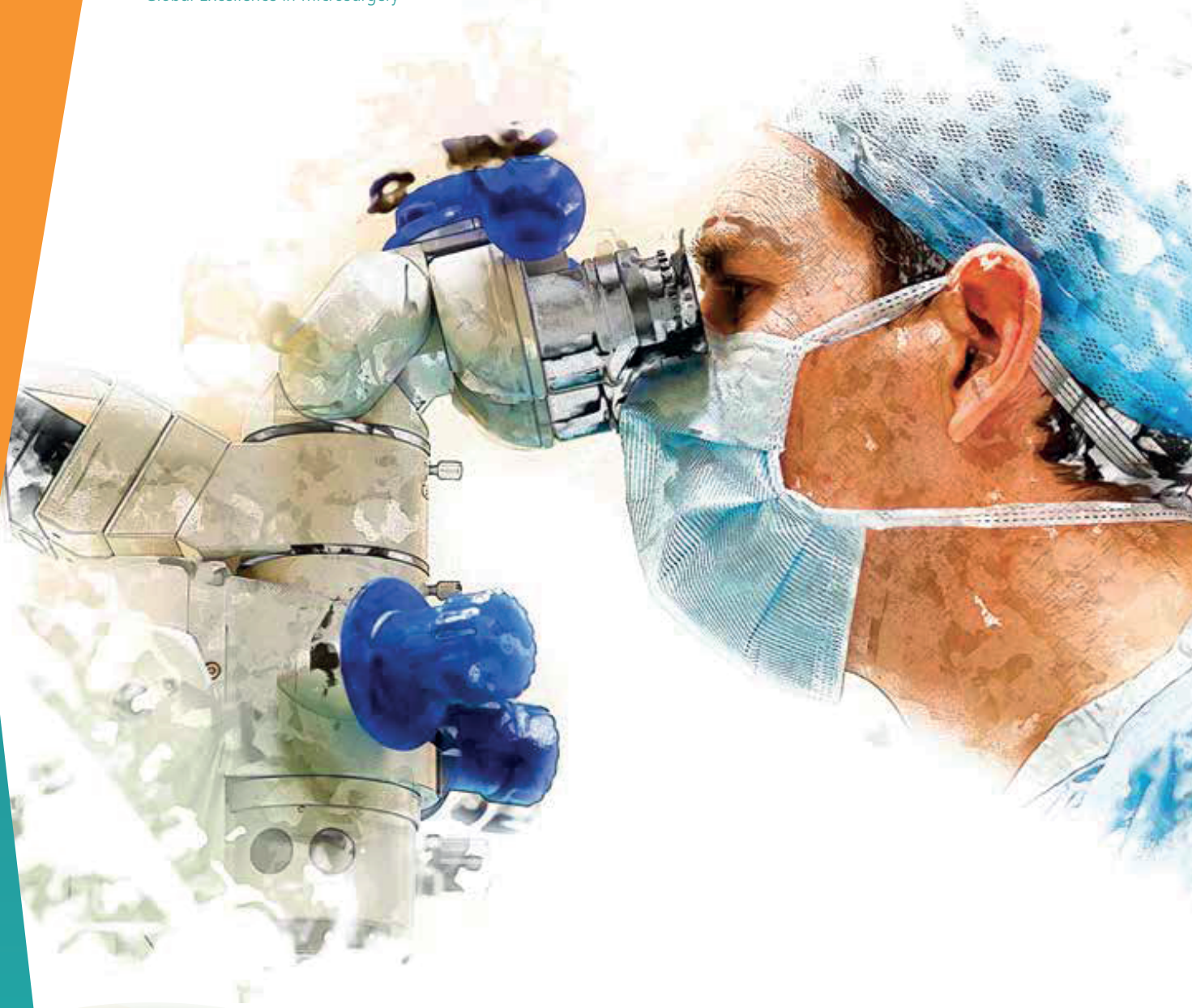

GEM Mikrochirurgie der Spitzenklasse

Innovation, Fortschritt und Vertrauen

Das Produktangebot von GEM wurde speziell für die rekonstruktive Mikrochirurgie entwickelt und genießt großes Vertrauen in der Branche.

Durch ihre Innovation, Einzigartigkeit und Verlässlichkeit sind die GEM-Produkte in der rekonstruktiven Mikrochirurgie nicht mehr wegzudenken.

In dieser Broschüre finden Sie das GEM-Sortiment im Überblick.

Inhaltsverzeichnis

Mikrovaskuläre Anastomose - Das Coupler-System	4
Anastomose mit Untraschall-Doppler - Das FLOW-COUPLER-System	6
Microclip- und Superfine-Microclip-System	8
Biover Mikro-Gefäßklemmen	10
Microsuture	11
Hintergrundfolie von MERCIAN	13

Mikrovaskuläre Anastomose - Das Coupler-System

Das MCA Synovis-Gefäßkopplungssystem wurde speziell für die Anastomose von Blutgefäßen bei mikrochirurgischen Eingriffen entwickelt.

Mit dem Anastomoseinstrument werden die Gefäßkopplungsringe in die Gefäßinnenwände platziert und beide Venen miteinander verbunden.
Die Gefäßkopplungsringe bestehen aus zwei Polyethylenringen hoher Dichte und rostfreien chirurgischen Edelstahlstiften, die für Blutgefäße mit einem Außendurchmesser von 0,8 mm bis 4,3 mm und einer Wanddicke bis zu 0,5 mm geeignet sind.
Aufgrund dieser Technik, wird das Gefäß offengehalten, wodurch die Durchgängigkeit verbessert und die Wahrscheinlichkeit einer Thrombose verringert wird

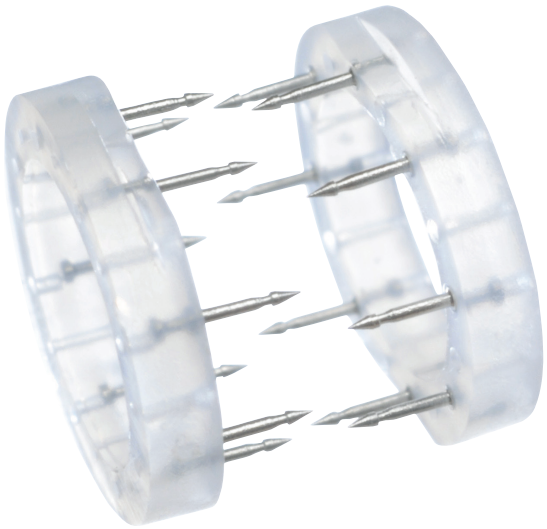

Die Vorteile des Gefäßkopplers

- Zeitsparend gegenüber der Naht, daher kürzere Ischämiezeit des Lappens, kürzere Anästhesie- und OP-Zeit.
- Der Intima-zu-Intima-Kontakt ohne Fremdmaterial (Nahtmaterial) innerhalb des Gefäßlumens führt zu einer Verringerung der Thromboserate.
- Anastomosen sind nach 4 Monaten 50 % belastbarer als genähte Anastomosen und profitieren von dem „Gerüst-Effekt“ des Rings, welcher verhindert, dass die Gefäßwand kollabiert.
- Größenunterschiede von Gefäßen sind besser handhabbar als bei traditioneller Naht-Technik.
- Ausführliche Dokumentationen belegen die einfache Handhabung und Zuverlässigkeit des Gefäßkopplers, sowohl bei der End-zu-End-, als auch bei der End-zu-Seit-Anastomose in den verschiedenen Bereichen des Körpers.

Bestellinformation Instrumente

GEM2740	Anastomoseinstrument für Gefäßkopplungen, mit Titanspitze
GEM2745	Sterilisationsbehälter für Gefäßkoppler
GEM2749	Messinstrument für Gefäßkoppler, doppelendig
GEM4183C	Mikrochirurgische Pinzette mit Führungsrinne für die Kopplerstifte, gewinkelt, 180 mm Länge
MI 8038	Titan-Mikropinzette, 8 mm Durchmesser, mit Fadenplatte, 150 mm Länge, Spitze gerade

Bestellinformation Ringe

GEM2750	Gefäßkopplung, 1,0 mm Durchmesser (grau), Box mit 6 Stück, steril
GEM2750/I	Gefäßkopplung, 1,0 mm Durchmesser (grau), Box mit 1 Stück, steril
GEM2751	Gefäßkopplung, 1,5 mm Durchmesser (blau), Box mit 6 Stück, steril
GEM2751/I	Gefäßkopplung, 1,5 mm Durchmesser (blau), Box mit 1 Stück, steril
GEM2752	Gefäßkopplung, 2,0 mm Durchmesser (grün), Box mit 6 Stück, steril
GEM2752/I	Gefäßkopplung, 2,0 mm Durchmesser (grün), Box mit 1 Stück, steril
GEM2753	Gefäßkopplung, 2,5 mm Durchmesser (rot), Box mit 6 Stück, steril
GEM2753/I	Gefäßkopplung, 2,5 mm Durchmesser (rot), Box mit 1 Stück, steril
GEM2754	Gefäßkopplung, 3,0 mm Durchmesser (gold), Box mit 6 Stück, steril
GEM2754/I	Gefäßkopplung, 3,0 mm Durchmesser (gold), Box mit 1 Stück, steril
GEM2755	Gefäßkopplung, 3,5 mm Durchmesser (violett), Box mit 6 Stück, steril
GEM2755/I	Gefäßkopplung, 3,5 mm Durchmesser (violett), Box mit 1 Stück, steril
GEM2756	Gefäßkopplung, 4,0 mm Durchmesser (orange), Box mit 6 Stück, steril
GEM2756/I	Gefäßkopplung, 4,0 mm Durchmesser (orange), Box mit 1 Stück, steril

Anastomose mit Ultraschall Doppler - Das FLOW-COUPLER-System

ist die Verbindung zweier bewährter Technologien: dem GEM-Gefäßkoppler und einem 20-MHz-Ultraschall-Doppler.

Das FLOW-COUPLER-System wurde für den Einsatz in der End-zu-End-Anastomose entwickelt und ermittelt intra- und postoperativ den Blutfluss direkt an der Anastomosestelle.

Die verlässliche GEM-COUPLER-Technologie

Auch das FLOW-COUPLER-System ermöglicht im Vergleich zum herkömmlichen Nähen eine sichere Anastomose innerhalb kürzerer Zeit und eine reduzierte Ischämiedauer. Aufgrund der Technik, bei der zwei Gefäßinnenwände miteinander verbunden werden, wird das Gefäß offengehalten, wodurch die Durchgängigkeit verbessert und die Wahrscheinlichkeit einer Thrombose verringert wird.

Akustische Warnung – Durch das Aussetzen des akustischen Signals wird das Personal darauf hingewiesen, dass ein mögliches Durchblutungsproblem bestehen könnte.

Durch einen Press-Fit-Befestigungspunkt für die 20-MHz-Dopplersonde wird eine sichere Ausrichtung der Sonde und eine präzise Überwachung des Gefäßes bei gleichzeitiger Minderung von Geräuschen und Störungen durch umliegende Gefäße sichergestellt. Das voll isolierte silberbeschichtete Koaxial-Kupferkabel ist gegenüber Geräusch- und Signalstörungen weniger anfällig.

Schnelle Erkennung durch Venenüberwachung

Durch die Überwachung der abfließenden Vene des Hautlappens wird ein Stillstand der Venendurchblutung nahezu sofort erkannt. Eine Unterbrechung der Arteriendurchblutung führt zu einem quasi unmittelbaren Aussetzen des venösen Doppler-Signals. Die Venenüberwachung bietet gegenüber der Arterienüberwachung im Hinblick auf die Erkennung einer Venenthrombose einen deutlichen Vorteil und dient gleichzeitig als Überwachung der Arteriendurchblutung.

Frühzeitiges Eingreifen durch intensive postoperative Überwachung

Das rechtzeitige Erkennen der Lappengefährdung ist eine bedeutende Einflussvariable bei der Rettungsquote von Hautlappen. Eine intensive Überwachung während der ersten Phase nach der Operation durch den Arzt führt zu einer früheren Neuuntersuchung und einem schnelleren Eingreifen.

Vorteile für den Arzt

Der Monitor ermöglicht die Überwachung von zwei Anastomosen. Das externe Anschlusskabel kann von der Dopplersonde gelöst werden - dies schafft Bewegungsfreiheit für die Patienten. Die Dopplersonde kann während der Nachuntersuchung schnell und einafch entfernt werden.

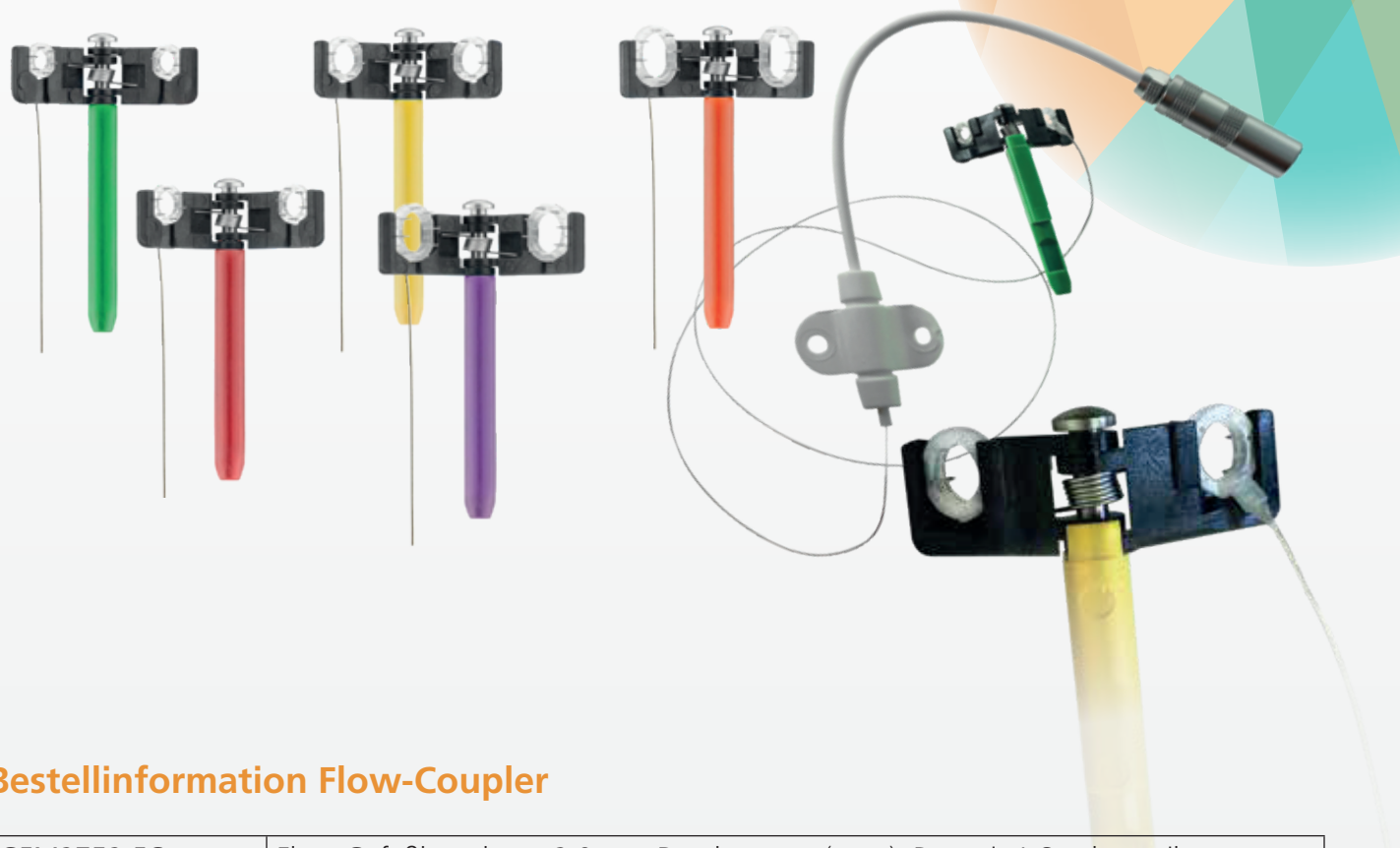

Bestellinformation Flow-Coupler

GEM2752-FC	Flow-Gefäßkopplung, 2,0 mm Durchmesser (grün), Box mit 1 Stück, steril
GEM2753-FC	Flow-Gefäßkopplung, 2,5 mm Durchmesser (rot), Box mit 1 Stück, steril
GEM2754-FC	Flow-Gefäßkopplung, 3,0 mm Durchmesser (gold), Box mit 1 Stück, steril
GEM2755-FC	Flow-Gefäßkopplung, 3,5 mm Durchmesser (violett), Box mit 1 Stück, steril
GEM2756-FC	Flow-Gefäßkopplung, 4,0 mm Durchmesser (orange), Box mit 1 Stück, steril
GEM1020M	Flow-Koppler Monitor
GEM1012EU	Netzteil und Netzkabel für Flow-Koppler Monitor

Microclip- und SuperFine-Microclip-System

Der kleinste Microclip der Welt

Unser Angebot an Microclips ermöglicht den sicheren Verschluss auch von allerfeinsten Blutgefäßen. Diese Titanklemmen haben eine einzigartige atraumatische geometrische Oberfläche, die sich beim Verschließen ineinander verzahnt und somit ein Verrutschen verhindert.

Die richtige Größe für den Mikrochirurgen

Ein kleiner Schritt für den Mikrochirurgen - aber eine große Verbesserung bei der Blutstillung. Weil manchmal selbst der GEM-Microclip zu groß ist, bieten wir auch den GEM-SuperFine-Microclip an.

Gehärtetes Titan mit formbarer Konsistenz

- Ermöglicht einen optimalen Gefäßverschluss.
- Das Material verhindert ein Öffnen des Clips nach dem Anlegen.
- Biologisch neutral und strahlendurchlässig.
- Eisenfrei und somit geeignet für MRT und andere Scanner.

Ergonomisch geformte Spender

- Praktische selbstklebende Rückseite der Magazine.
- Exakte, mühelose Entnahme.

Chevron-Form

Durch die spezielle Chevron-Form wird ein vollständiger und sicherer Verschluss von der Spitze her ermöglicht.

Rautenförmiges Innenprofil

- Das rautenförmige Innenprofil mit der atraumatischen sich verzahnenden Oberfläche verbessert den sicheren Verschluss der Gefäße.
- Die Riffelung besteht aus kleinen pyramidenförmigen Erhebungen, ähnlich der Hartmetall-einlagen in Nadelhaltern und ermöglicht damit einen festen Halt in alle Richtungen.

Dreikantiger Draht

Die Clips sitzen passgenau in den rutschsicheren Griffmulden der Anlegezangen für eine sichere Entnahme und exakte Platzierung.

Bestellinformation Microclips

GEM2431	Microclip „Titanium“ (orange), 30 Magazine zu je 6 Stück, steril
GEM615-1G	Anlegezange für Microclip „Titanium“, 15 cm
GEM620-1G	Anlegezange für Microclip „Titanium“, 20 cm
GEM1521	SuperFine Microclip „Titanium“ (blau), 30 Magazine zu je 6 Stück, steril
GEM715-SF	Anlegezange für SuperFine Microclip „Titanium“, 15 cm
GEM720-SF	Anlegezange für SuperFine Microclip „Titanium“, 20 cm

BIOVER Mikro-Gefäßklemmen

Die BIOVER® Gefäßklemmen sind Präzisionsinstrumente. Sie wurden unter der Anleitung zahlreicher international bekannter Chirurgen entwickelt und zeichnen sich wie folgt aus:

- Höchste Qualität aus Edelstahl und Polycarbonat.
- Garantiert exakt kalibrierter Klemmdruck.
- Maul der Klemme mit atraumatischen Mikrozähnchen.
- Steriler Einmalartikel, gebrauchsfertig.
- Lieferung in Boxen zu 10 Stück, jede einzelne Klemme ist steril verpackt.
- Exzellenter Farbkontrast, keine Lichtreflexion.
- Farblich kodiert: gelb für Arterien, grün für Venen.
- Die Gefäßklemmen sind in 2 Ausführungen (einfach oder doppelt) und in drei (für Arterien) und vier (für Venen) Grössen verfügbar, welche sich nach dem Gefäßdurchmesser richten.

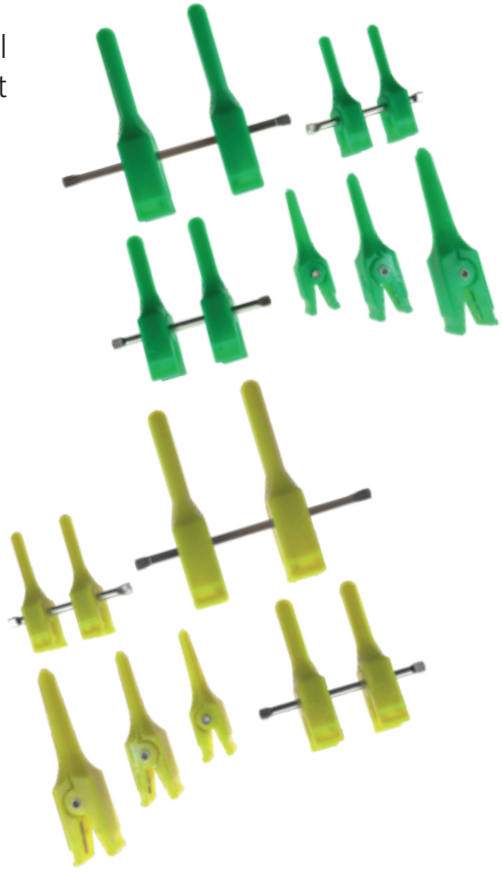

Bestellinformation Mikro-Gefäßklemmen

Arterien (gelbe Klemmen)	
TKS-1	BIOVER Mikro-Gefäßklemme, einfach, für Gefäßdurchmesser < 1 mm, Pressdruck 40 g, 10 Stück steril
TKS-2	BIOVER Mikro-Gefäßklemme, doppelt, für Gefäßdurchmesser < 1 mm, Pressdruck 40 g, 10 Stück steril
TKM-1	BIOVER Mikro-Gefäßklemme, einfach, für Gefäßdurchmesser 1-2 mm, Pressdruck 60 g, 10 Stück steril
TKM-2	BIOVER Mikro-Gefäßklemme, doppelt, für Gefäßdurchmesser 1-2 mm, Pressdruck 60 g, 10 Stück steril
TKL-1	BIOVER Mikro-Gefäßklemme, einfach, für Gefäßdurchmesser bis 4 mm, Pressdruck 120 g, 10 Stück steril
TKL-2	BIOVER Mikro-Gefäßklemme, doppelt, für Gefäßdurchmesser bis 4 mm, Pressdruck 120 g, 10 Stück steril
Venen (grüne Klemmen)	
TKFV-1	BIOVER Mikro-Gefäßklemme, einfach, für Gefäßdurchmesser 0,2-1 mm, Pressdruck 15 g, 10 Stück steril
TKFV-2	BIOVER Mikro-Gefäßklemme, doppelt, für Gefäßdurchmesser 0,2-1 mm, Pressdruck 15 g, 10 Stück steril
TKSV-1	BIOVER Mikro-Gefäßklemme, einfach, für Gefäßdurchmesser < 1 mm, Pressdruck 20 g, 10 Stück steril
TKSV-2	BIOVER Mikro-Gefäßklemme, doppelt, für Gefäßdurchmesser < 1 mm, Pressdruck 20 g, 10 Stück steril
TKMV-1	BIOVER Mikro-Gefäßklemme, einfach, für Gefäßdurchmesser 1-2 mm, Pressdruck 30 g, 10 Stück steril
TKMV-2	BIOVER Mikro-Gefäßklemme, doppelt, für Gefäßdurchmesser 1-2 mm, Pressdruck 30 g, 10 Stück steril
TKLV-1	BIOVER Mikro-Gefäßklemme, einfach, für Gefäßdurchmesser > 2 mm, Pressdruck 40 g, 10 Stück steril
TKLV-2	BIOVER Mikro-Gefäßklemme, doppelt, für Gefäßdurchmesser > 2 mm, Pressdruck 40 g, 10 Stück steril

GEM
Global Excellence in Microsurgery
Synovis MCA

MICROSUTURE

MICROSUTURE is a nylon monofilament nonabsorbable, sterile surgical suture that is indicated for use in general soft tissue approximation and/or ligation, including use in microsurgical, cardiovascular, ophthalmic, and neurological procedures.

STANDARD NEEDLES

STRONGER NEEDLES

100% increase in ductility.
Less likely to break when reshaping.

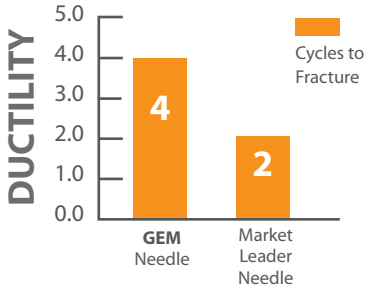

SHARPER NEEDLES

12% less force needed.
Less force, less tissue trauma.

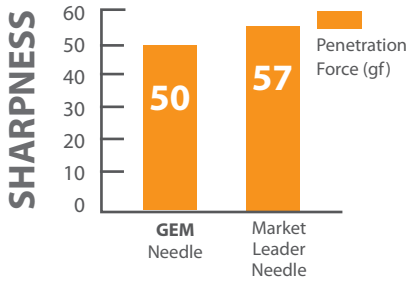

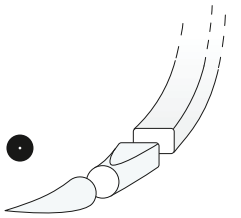

Taper

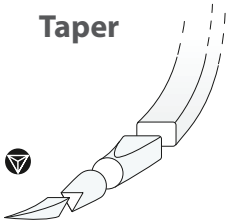

Taper Sharp

Our needles are made from a propriety steel blend which is mechanically processed to make the material harder while still retaining high tensile strength. This enables the needles to have very sharp points and great durability while maintaining their flexibility. This results in greater tensile strength, higher ductility, and less brittleness than 400 series stainless steel.

COBRA BLACK®

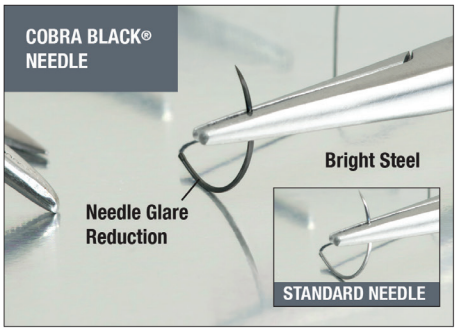

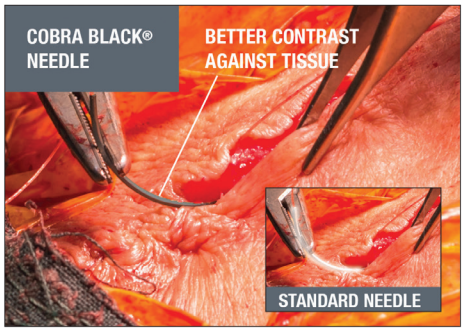

CobraBlack®

The CobraBlack® needle is a patent-pending design that enhances visibility, especially in blood and smaller surgery sites. The CobraBlack® needles eliminate the hindering glare from the operating room lighting. The needles are more distinguishable than the standard stainless steel needles.

Features & Benefits

Characteristics

- Uniform diameter of the suture
- Maximum flexibility of the strand
- Consistent knot security
- Minimal memory

GEM
Global Excellence in Microsurgery
Synovis MCA

Ordering Information

Code	Size	Needle Type	Needle Code	Diameter	Curvature	Needle Length (arch)	Suture Length	Picture 1:1
GEM189BK	8-0 Nylon	taper	BV140-5	140 dia	3/8 curve	5.1 mm	15 cm/6" suture lgth	
GEM192BK	8-0 Nylon	taper	BV140-6	140 dia	3/8 curve	6.4 mm	15 cm/6" suture lgth	
GEM395BK	8-0 Nylon	tapersharp	V140-6	140 dia	3/8 curve	6.4 mm	15 cm/6" suture lgth	
GEM177BK	9-0 Nylon	taper	BV100-3	100 dia	3/8 curve	3.8 mm	15 cm/6" suture lgth	
GEM180BK	9-0 Nylon	taper	BV100-5	100 dia	3/8 curve	5.1 mm	15 cm/6" suture lgth	
GEM188BK	9-0 Nylon	taper	BV140-5	140 dia	3/8 curve	5.1 mm	15 cm/6" suture lgth	
GEM386BK	9-0 Nylon	tapersharp	V100-3	100 dia	3/8 curve	3.8 mm	15 cm/6" suture lgth	
GEM389BK	9-0 Nylon	tapersharp	V100-5	100 dia	3/8 curve	5.1 mm	15 cm/6" suture lgth	
GEM171BK	10-0 Nylon	taper	BV70-3	70 dia	3/8 curve	3.8 mm	10 cm/4" suture lgth	
GEM385BK	10-0 Nylon	tapersharp	V100-3	100 dia	3/8 curve	3.8 mm	15 cm/6" suture lgth	
GEM170BK	11-0 Nylon	taper	BV70-3	70 dia	3/8 curve	3.8 mm	10 cm/4" suture lgth	
GEM195BK	11-0 Nylon	taper	BV50-3	50 dia	3/8 curve	3.6 mm	10 cm/4" suture lgth	
GEM382BK	11-0 Nylon	tapersharp	V70-3	70 dia	3/8 curve	3.8 mm	10 cm/4" suture lgth	

Cobra Black Needle

GEM192BKC	8-0 Nylon	taper	BV140-6	140 dia	3/8 curve	6.4 mm	15 cm/6" suture lgth	
GEM395BKC	8-0 Nylon	tapersharp	V140-6	140 dia	3/8 curve	6.4 mm	15 cm/6" suture lgth	
GEM180BKC	9-0 Nylon	taper	BV100-5	100 dia	3/8 curve	5.1 mm	15 cm/6" suture lgth	
GEM389BKC	9-0 Nylon	tapersharp	V100-5	100 dia	3/8 curve	5.1 mm	15 cm/6" suture lgth	

INDICATIONS FOR USE:
MICROSUTURE is indicated for use in general soft tissue approximation and/or ligation, including use in microsurgical, cardiovascular, ophthalmic, and neurological procedures.

Rx Only. For safe and proper use of this device, refer to the Instructions for Use.

Manufactured by Riverpoint Medical and Distributed by Synovis Micro Companies Alliance, Inc.

GEM design is a trademark of Baxter International Inc., or its subsidiaries.
PHONE: 800-510-3318 | FAX: 205-941-1522 | EMAIL: smca_information@baxter.com | 439 Industrial Lane, Birmingham, AL 35211 | www.synovismicro.com
Synovis Micro Companies Alliance, Inc. (a subsidiary of Baxter International Inc.)

Hintergrundfolie von MERCIAN

MERCIAN
Surgical Instruments of Excellence

Bessere Sicht auf Gefäße in der Mikrochirurgie

Silikon-Streifen, Vorderseite mit 1 mm Maß-Gitter, Rückseite glatt.
Erhältlich in den Farben Blau, Grün und Gelb.
Einzeln steril verpackt, Lieferung in Boxen zu je 12 Stück.

Anwendung

Bei der Anastomose von Gefäßen in der Mikrochirurgie zur Erhöhung der Sichtbarkeit von Gefäßen und Details.

Die Hintergrundfolie kann beidseitig verwendet werden. Entweder glatt oder mit der Maßgitterseite zur besseren Größeneinschätzung.

Das Material ist matt zur Vermeidung von Reflexionen und nicht haftend, um die Beweglichkeit des Gefäßes zu unterstützen.

Boxen zu je 12 Stück
Steril

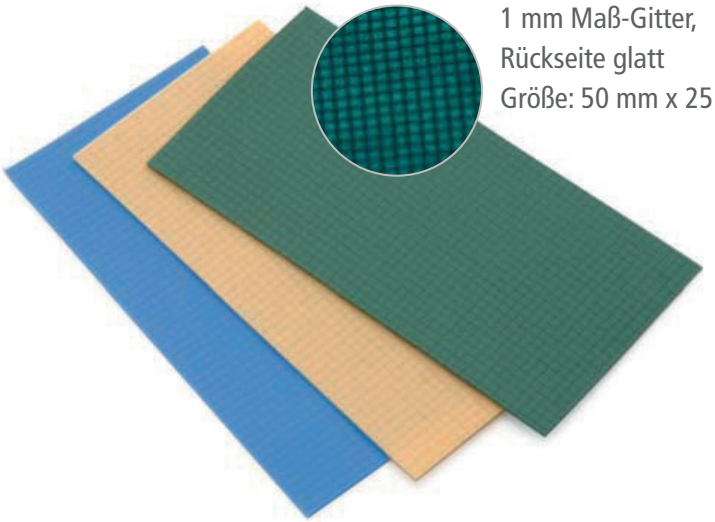

1 mm Maß-Gitter,
Rückseite glatt
Größe: 50 mm x 25 mm

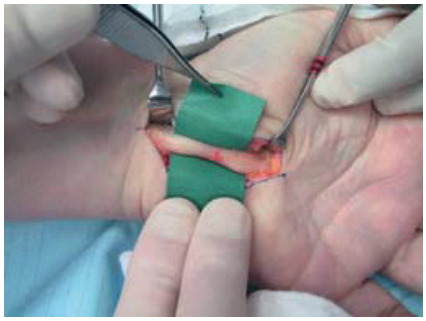

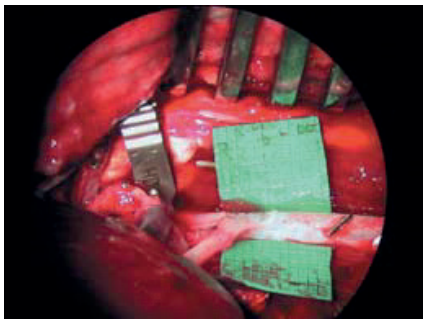

CE
1639

Farbe	Bestellnummer
gelb	VB2
grün	VB3
blau	VB4

- Röntgenstrahlendichtes Silikon
- Maß-Gitter 1 mm
- Latexfrei
- Einzeln steril verpackt

GEM
Global Excellence in Microsurgery

Verkauf in Deutschland:

TapMed Medizintechnik Handels GmbH
Gewerbepark 10 • 34317 Habichtswald-Ehlen
Telefon 05606 53060-0 • Telefax 05606 53060-44
info@tapmed.de • www.tapmed.de

Verkauf in der Schweiz:

TapMed Swiss AG
Gumprechtstr. 33 • CH- 6376 Emmetten
Telefon +41 41 520 61 11 • info@tapmed-swiss.ch • www.tapmed-swiss.ch

Synovis Micro Companies Alliance, Inc. (a subsidiary of Baxter International Inc.) 439 Industrial Lane, Birmingham, AL 35211-4464 USA. (Tel) **205.941.0111** (Toll free) **800.510.3318** (Fax) **205.941.1522**
www.synovismicro.com

GEM
Synovis MCA

①

COUPLER™

CE 0086

Reinigungs- und Sterilisationshinweise

Stand: 01.09.2014

⇨ Gefäßkopplersystem

Abb. 1

GEM2749

Mess-Schablone
(Chirurgischer Edelstahl)

Abb. 2

GEM4183C

Mikropinzette
(Chirurgischer Edelstahl)

Abb. 3

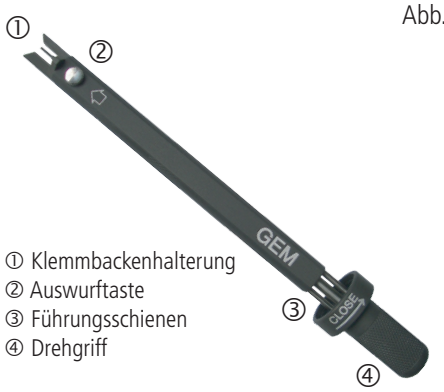

① Klemmbackenhalterung
② Auswurftaste
③ Führungsschienen
④ Drehgriff

GEM2740

Anastomoseinstrument
(Chirurgischer Edelstahl, Titan, hartanodisiertes Aluminium)

ACHTUNG:

A. Die Aufbereitung des Anastomoseinstruments darf nur ohne den Einmal-Klemmbackenaufsatz erfolgen (siehe Abb. 4)

B. Die Auswurftaste darf nur am geöffneten Instrument (Abb. 3 und Abb. 6) betätigt werden.

Abb. 4

Einmal-Klemmbackenaufsatz

Abb. 5

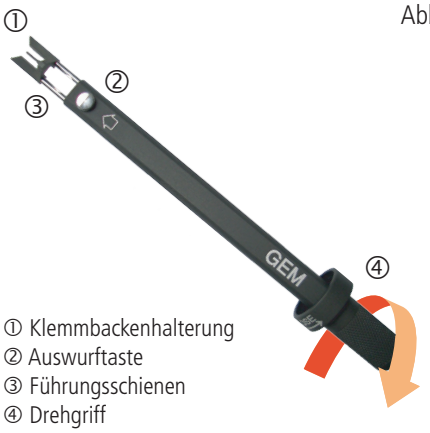

① Klemmbackenhalterung
② Auswurftaste
③ Führungsschienen
④ Drehgriff

Abb. 6

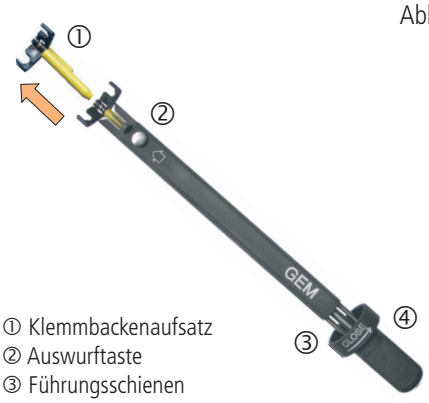

① Klemmbackenaufsatz
② Auswurftaste
③ Führungsschienen
④ Drehgriff

Abnehmen des benutzten Einmal-Klemmbackenaufsatzes:

- Ist das Anastomoseinstrument geschlossen (Abb. 5) muss es geöffnet werden.
- Zum Abnehmen des benutzten Einmal-Klemmbackenaufsatzes vom Instrument ist der Drehgriff bis zum Anschlag entgegen dem Uhrzeigersinn zu drehen.
- Drücken Sie die Auswurftaste nahe dem Pfeil auf dem Instrument und nehmen Sie den Einmal-Klemmbackenaufsatz ab (Abb. 6)

ACHTUNG:

Die Mikropinzette immer seitlich (offen) in die Halterung des Steribehälters geben, niemals geschlossen!

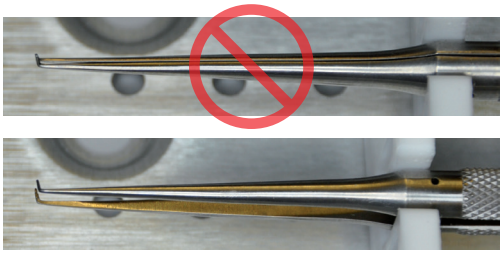

GEM
Synovis MCA

②

COUPLER™

CE 0086

Reinigungs- und Sterilisationshinweise

Stand: 01.09.2014

Reinigung

Maschinelles Verfahren im Waschkorb*

Desinfektion

thermisch / 93° C - 10 Minuten*

*nur mit DGHM gelisteten Reinigungs- und Desinfektionsmitteln, pH-Werte 7-10

Wartung GEM2740

ACHTUNG:
A. Vor der Sterilisation müssen sowohl das Drehgriffinnere als auch die Führungsschienen mit einem wasserlöslichen (silikonfreien) Schmiermittel geschmiert werden.
B. Die Freigabetaste darf nur am geöffneten Instrument betätigt werden.

Abb. 7

Abb. 8

① Instrumentenspitze ② Auswurftaste ③ Führungsschienen ④ Drehgriff

Abb. 9

① Instrumentenspitze ② Führungsschienen ③ Auswurftaste

1. Geben Sie das wasserlösliche (silikonfreie) Schmiermittel in das am Drehgriff befindliche Loch (Abb. 7). Drehen Sie danach den Drehgriff, um das Schmiermittel im Inneren zu verteilen.
2. Schmieren Sie bitte die Führungsschienen am Drehgriff (Abb. 8) Drehen Sie danach den **Drehgriff bis zum Anschlag im Uhrzeigersinn.**
3. Schmieren Sie bitte die Führungsschienen an der Instrumentenspitze (Abb 9.) Drehen Sie danach den **Drehgriff bis zum Anschlag gegen den Uhrzeigersinn.**
4. Betätigen Sie mehrmals die Auswurftaste (Abb. 8 + Abb. 9)

Funktionsprüfung

Das Drehen des Drehgriffes und die Auswurftaste müssen leichtgängig zu betätigen sein.

Verpackung

Doppelte Klarsicht-Steriverpackung oder im Container

Sterilisation

Dampfsterilisation, 134° Celsius, mindestens 5 Minuten

Risikobewertung

nach RKI: Kritisch B

CE 0086

Hersteller:
MCA Synovis Micro Comp. Alliance
439 Industrial Lane
Birmingham, AL 35211-4464-USA

EU-Bevollmächtigter:
Baxter Deutschland GmbH
Edisonstraße 4
85716 Unterschleißheim

Verkauf in Deutschland:
TapMed Medizintechnik Handels GmbH
Gewerbepark 10 - 34317 Habichtswald-Ehlen
Telefon 05606 53060-0

Koppler-System zur mikrovaskulären Anastomose
von MCA Synovis

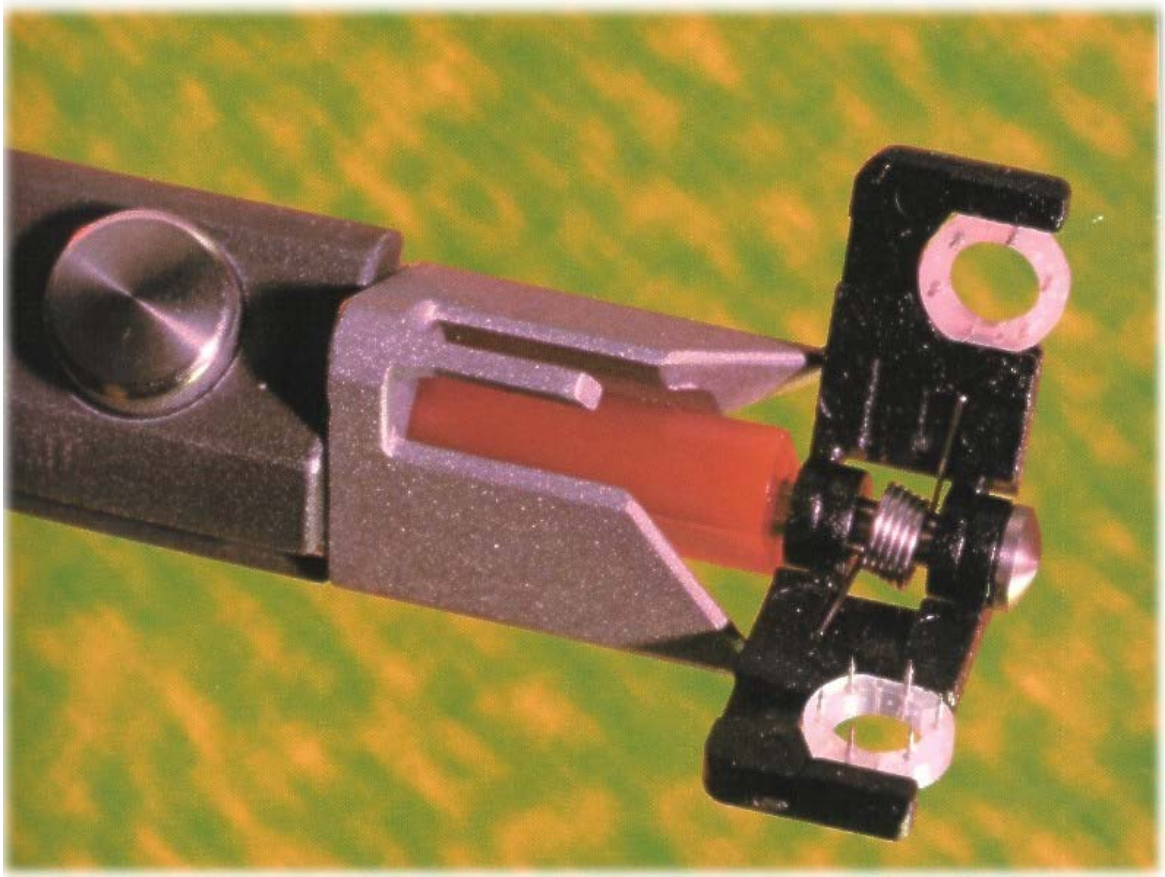

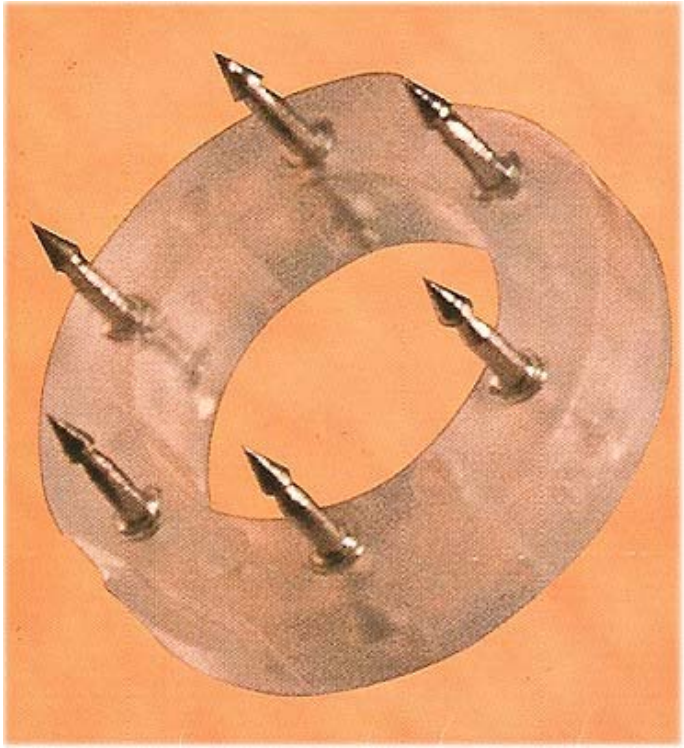

END-ZU-END-ANASTOMOSE

Verkauf: TapMed Medizintechnik Handels GmbH • Gewerbepark 10 • 34317 Habichtswald-Ehlen
Tel. 05606 53060-0 • Fax 05606 53060-44 • www.tapmed.de

GEM-	2756	2755	2754	2753	2752	2751	2750
mm	4	3,5	3	2,5	2	1,5	1

Kopplerringe in Haltevorrichtung

GEM2749

Doppelseitiges Messinstrument (Chirurgischer Edelstahl)

GEM2740

Anastomoseinstrument (Chirurgischer Edelstahl, Titan, harteloxiertes Aluminium)

GEM4183C

Mikrochirurgische Pinzette (Chirurgischer Edelstahl)

Instrumente

F285_2

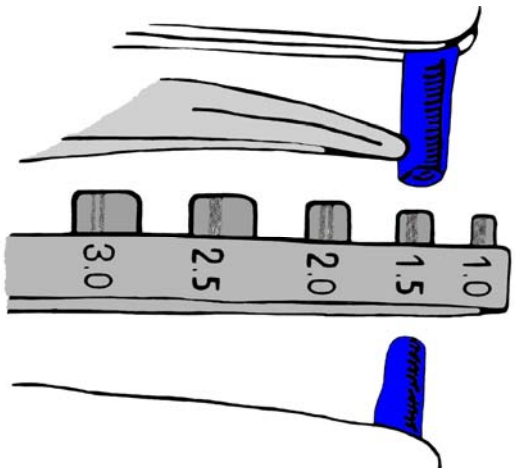

Alle Koppler-Größen

Mindestens 1 cm von jedem Gefäßende mobilisieren.
Mit Hilfe des Messinstruments den **Außendurchmesser** von jedem Gefäß ermitteln. Die runden Markierungen auf dem Messinstrument **dürfen nicht** in das Gefäßlumen eingebracht werden.
Geeignete Größe des Koppler-Geräts auswählen. Die Enden beider Gefäße sollten der Größe des Innendurchmessers des ausgewählten Koppler-Geräts entsprechen.

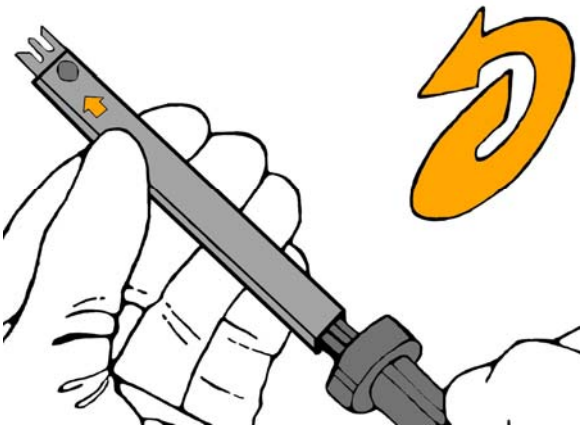

Alle Koppler-Größen

Den Griff des Anastomoseinstruments vollständig gegen den Uhrzeigersinn drehen und dann das Kopplergerät in das Anastomoseinstrument einbringen.

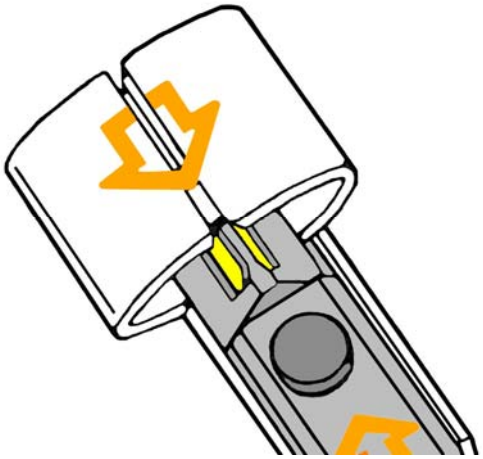

Alle Koppler-Größen

Bei dem Laden müssen die gleichartigen Indikatorpfeile auf dem Koppler-Gerät und dem Anastomoseinstrument aufeinander ausgerichtet sein.
Ein korrektes Laden wird durch einhörbares Klicken angezeigt.

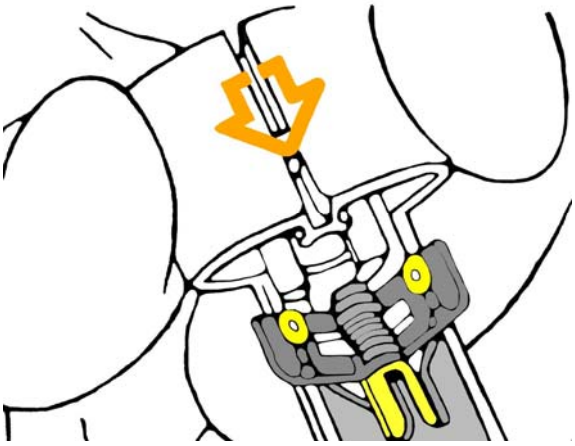

Alle Koppler-Größen

Das Koppler-Gerät durch festes Abziehen vom Anastomoseinstrument aus der Schutzabdeckung entnehmen.

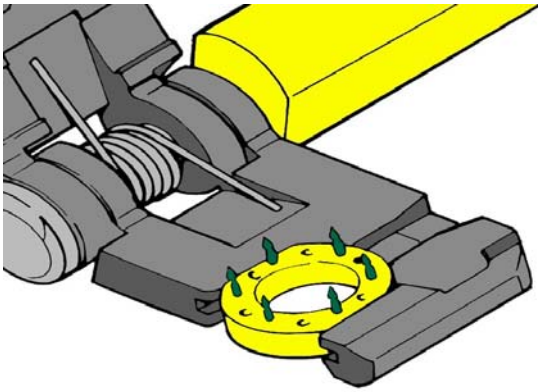

Alle Koppler-Größen

Visuell kontrollieren, dass die Stifte auf den Ringen aufrecht stehen und senkrecht zum Ring zeigen.

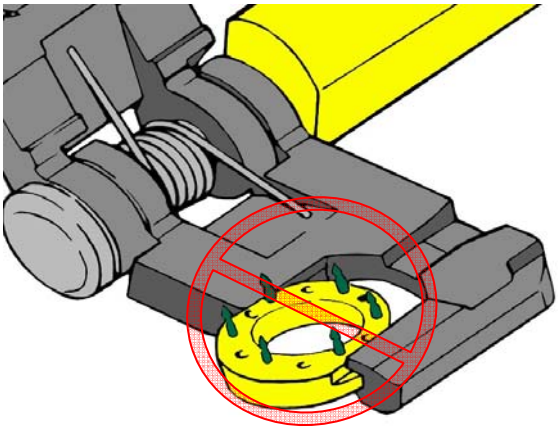

Alle Koppler-Größen

Visuell kontrollieren, dass sich beide Ringe im unteren U-förmigen Abschnitt der Haltevorrichtung befinden.

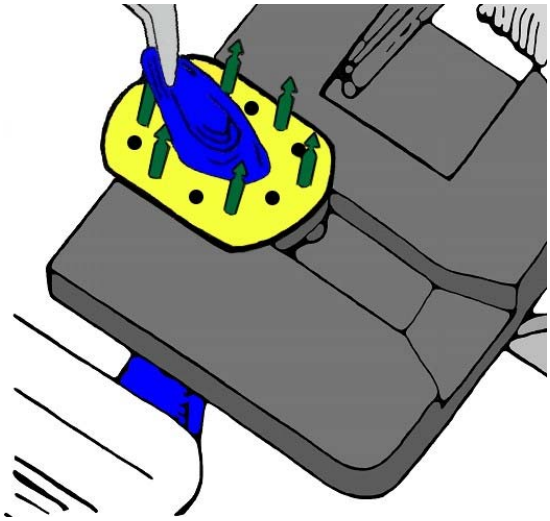

Koppler-Größe bis 3 mm Durchmesser mit 6 Stiften auf jedem Ring

Das Anastomoseinstrument mit der Koppler-Haltevorrichtung in der Nähe der beiden Gefäßenden perpendikulär zu den Gefäßen platzieren.
Ein Gefäßende mit Hilfe einer mikrochirurgischen Pinzette durch einen der Koppler-Ringe ziehen.

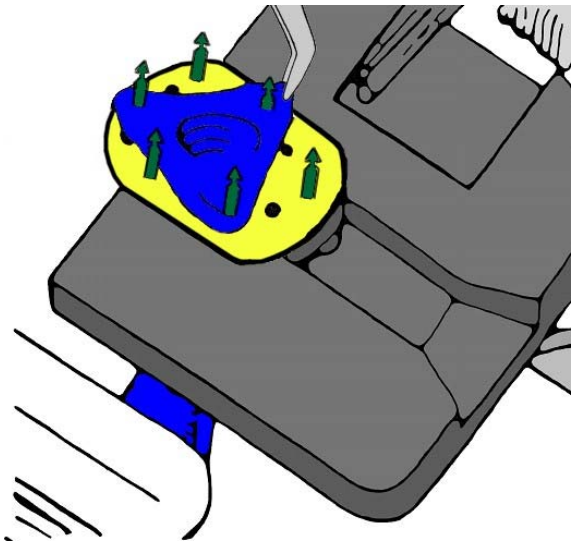

Koppler-Größe bis 3 mm Durchmesser mit 6 Stiften auf jedem Ring

Einen Abschnitt von Gefäßwand und Intima von ein bis zwei Stiftdurchmesser erfassen, im Winkel von 90 Grad ausstülpen und auf einen Ringstift auffädeln.
Das Gefäß im Dreieck mit jedem zweitem Stift fest auffädeln, bis drei Stifte verwendet wurden.

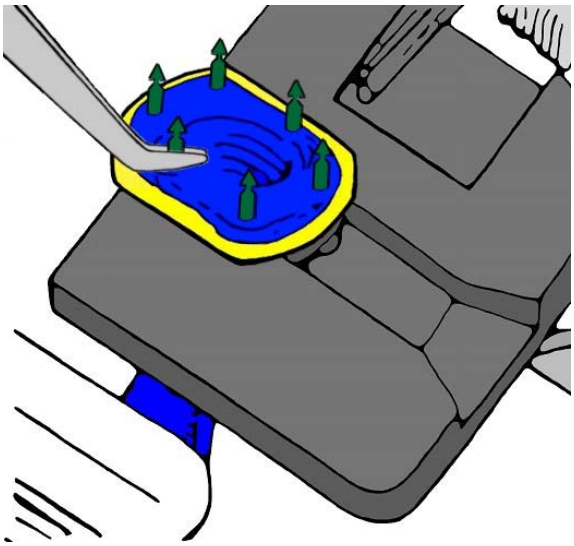

Koppler-Größe bis 3 mm Durchmesser mit 6 Stiften auf jedem Ring

Die Platzierung des Gefäßes auf dem Ring durch Auffädeln des Gefäßes mit den verbleibenden drei Stiften abschließen. Sicherstellen, dass sowohl die Gefäßwand als auch die Intima vollständig durch jeden Stift des Ringes befestigt wurde. Sollte die Gefäßwand während des Auffädelns reißen, ist das Gefäßende zu begradigen und die Prozedur zu wiederholen. Wiederholung dieser Schritte, um das andere Gefäßende auf den zweiten Koppler-Ring aufzufädeln.

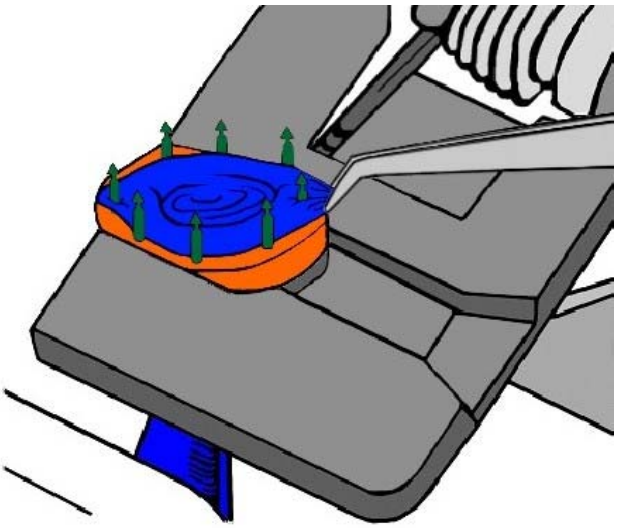

Koppler-Größe ab 3,5 mm Durchmesser mit 8 Stiften auf jedem Ring

Einen Abschnitt von Gefäßwand und Intima von ein bis zwei Stiftdurchmesser erfassen, im Winkel von 90 Grad ausstülpen und mit dem Ringstift, die sich in der Nähe des offenen Teils der Haltevorrichtung (offenes Ende des U-Abschnittes der Haltevorrichtung) befindet, auffädeln.
Die gegenüberliegende Seite der Gefäßöffnung mit dem direkt gegenüberliegenden Ringstift auffädeln.

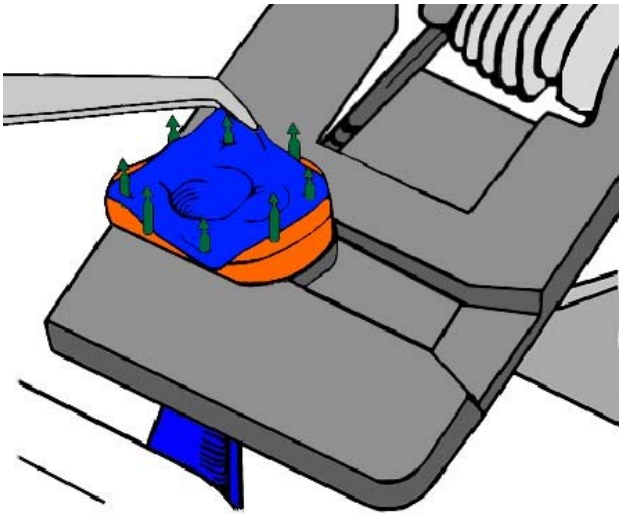

Koppler-Größe ab 3,5 mm Durchmesser mit 8 Stiften auf jedem Ring

Im Anschluss das Gefäß mit den Stiften an der Seite des Rings auffädeln und das Gefäß dabei so gleichmäßig wie möglich auf die vier Stifte verteilen.

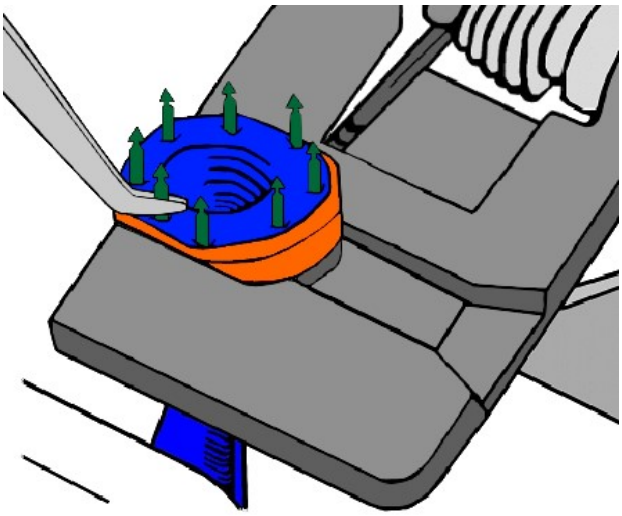

Koppler-Größe ab 3,5 mm Durchmesser mit 8 Stiften auf jedem Ring

Die Platzierung des Gefäßes auf dem Ring durch Auffädeln des Gefäßes mit den verbleibenden zwei Stiften in der Nähe des offenen Endes der Haltevorrichtung fortsetzen.
Die Auffädlung des Gefäßes mit den verbleibenden beiden Stiften im unteren Teil der Haltevorrichtung (unterer Teil des U-Abschnitts der Haltevorrichtung) abschließen.
Der letzte Schritt verhindert das vorzeitige Abrutschen des Rings aus der Haltevorrichtung.
Sicherstellen, dass sowohl die Gefäßwand als auch die Intima vollständig durch jeden Stift des Ringes gesichert wurde, um das Thromboserisiko zu verringern.
Wiederholung dieser Schritte, um das andere Gefäßende auf den zweiten Koppler-Ring aufzufädeln.

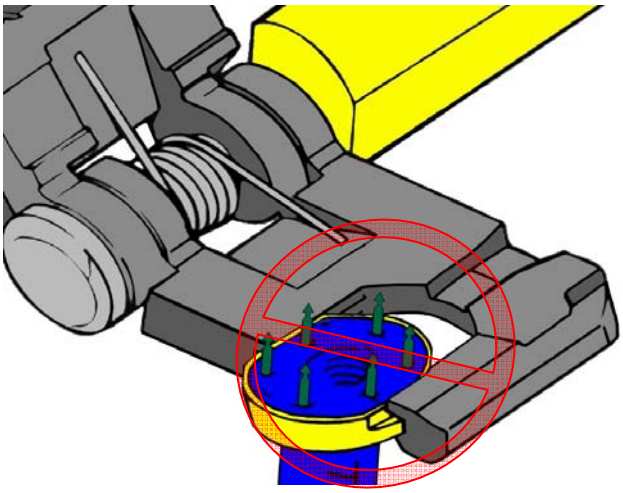

Alle Koppler-Größen

Wenn beide Gefäßenden angemessen aufgefädelt wurden, ist eine visuelle Kontrolle durchzuführen, um sicherzustellen, dass sich beide Ringe im unteren U-Abschnitt der Haltevorrichtung befinden.

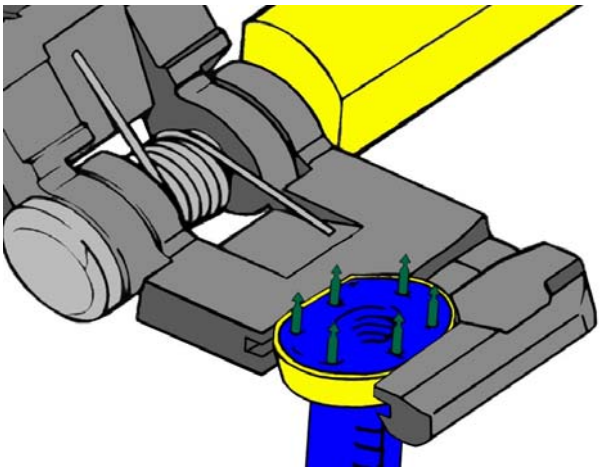

Alle Koppler-Größen

Wenn beide Gefäßenden angemessen aufgefädelt wurden, ist eine visuelle Kontrolle durchzuführen, um sicherzustellen, dass sich beide Ringe im unteren U-Abschnitt der Haltevorrichtung befinden.

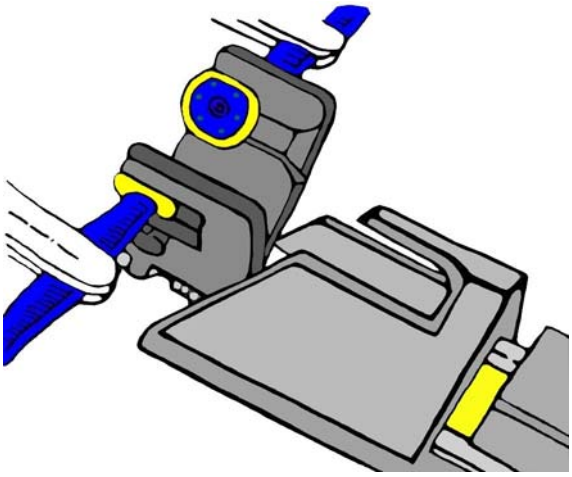

Alle Koppler-Größen

Die Ringe durch Drehen des Griffes des Anastomoseinstruments im Uhrzeigersinn zusammenfügen.

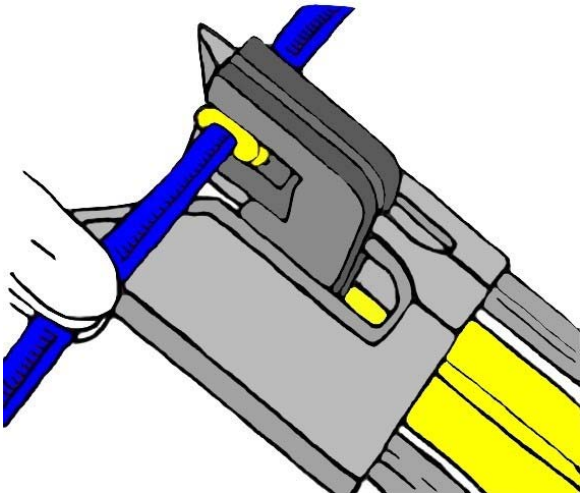

Alle Koppler-Größen

Den Griff nur solange drehen, bis der Auswurfstab beginnt, die nun vereinten Ringe zu bewegen.

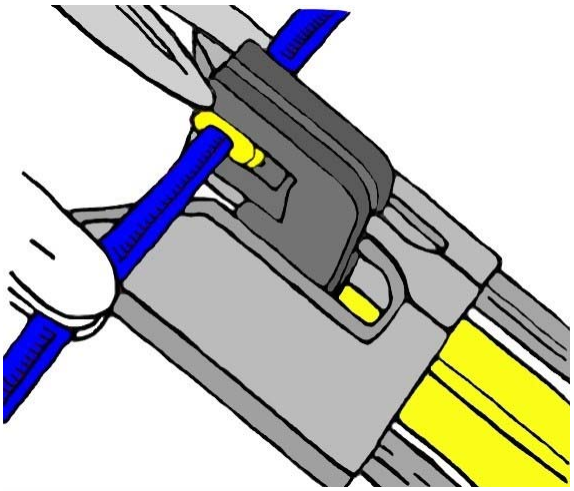

Alle Koppler-Größen

Vor dem Auswurf der vereinten Ringe, das Ende der anliegenden Haltevorrichtungen mit einer Klemme zusammendrücken, um die Einpassung des Rings und eine enge Reibungspassung zu sichern.
Zum Auswurf der vereinten Ringe den Griff des Anastomoseinstruments weiter im Uhrzeigersinn drehen.

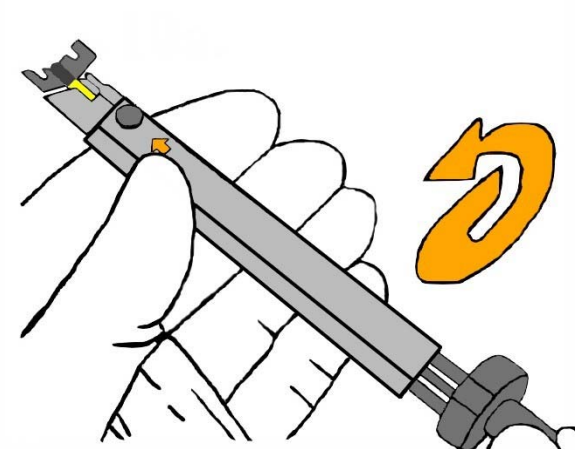

Alle Koppler-Größen

Zur Entfernung der Haltevorrichtung den Griff des Anastomoseinstruments vollständig gegen den Uhrzeigersinn drehen.

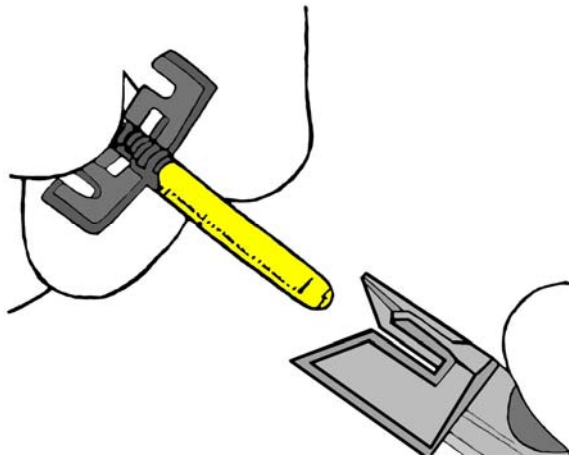

Alle Koppler-Größen

Die Freigabetaste in der Nähe des Pfeils auf dem Anastomoseinstrument drücken und die Haltevorrichtung entfernen.

Koppler-System zur mikrovaskulären Anastomose
von MCA Synovis

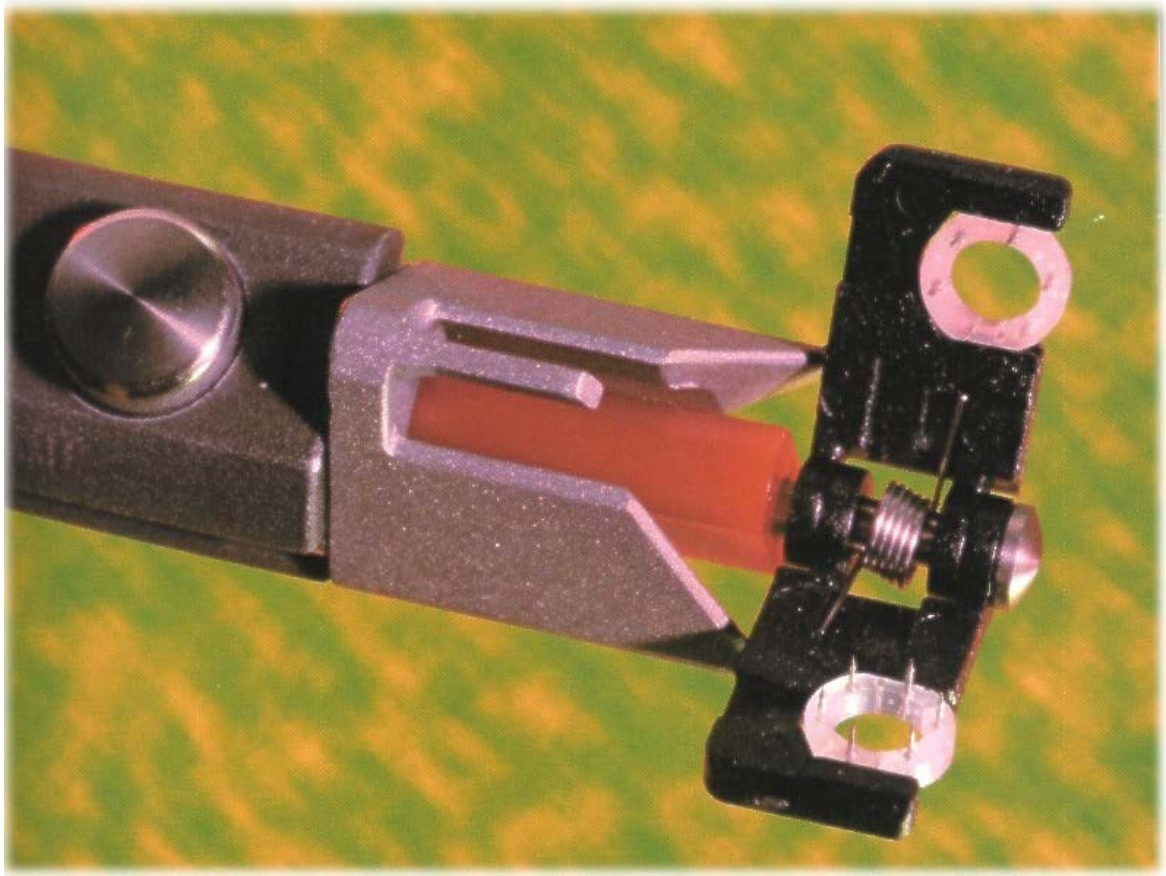

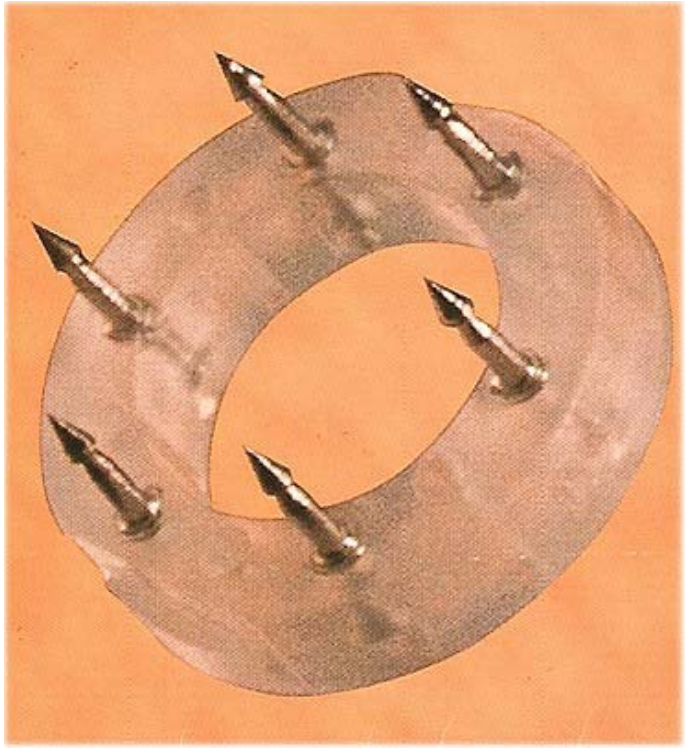

END-ZU-SEIT-ANASTOMOSE

Verkauf: TapMed Medizintechnik Handels GmbH • Gewerbepark 10 • 34317 Habichtswald-Ehlen
Tel. 05606 53060-0 • Fax 05606 53060-44 • www.tapmed.de

GEM-	2756	2755	2754	2753	2752	2751	2750
mm	4	3,5	3	2,5	2	1,5	1

Kopplerringe in Haltevorrichtung

GEM2749

Doppelseitiges Messinstrument (Chirurgischer Edelstahl)

GEM2740

Anastomoseinstrument (Chirurgischer Edelstahl, Titan, harteloxiertes Aluminium)

GEM4183C

Mikrochirurgische Pinzette (Chirurgischer Edelstahl)

Instrumente

F286_2

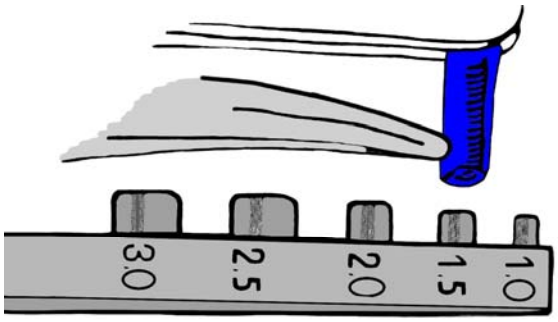

Alle Koppler-Größen

Mit konventioneller mikrochirurgischer Technik mindestens 1 cm des Endgefäßes mobilisieren. Gefäß abklemmen und Gefäßlumen irrigieren. Mindestens 2 cm des Seitegefäßes mobilisieren und Gefäß abklemmen. Bei Durchführung einer End-zu-Seit-Anastomose mit dem Koppler-Gerät wird das Lumen des Seitegefäßes geringgradig eingeengt. Aus diesem Grund sollte der Durchmesser des Seitgefäßes bei diesem Eingriff größer sein als das Endgefäß.
Den äußeren Durchmesser des Endgefäßes mithilfe des Messinstruments für Gefäße ermitteln. Die runden Markierungen auf dem Messinstrument **dürfen nicht** in das Gefäßlumen eingebracht werden.
Geeignete Größe des Koppler-Geräts auswählen.

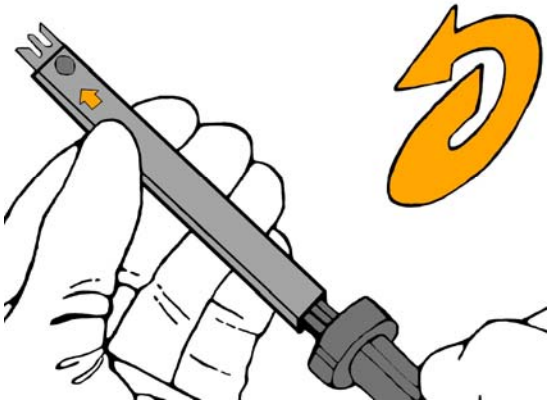

Alle Koppler-Größen

Den Griff des Anastomoseinstruments vollständig gegen den Uhrzeigersinn drehen und dann das Kopplergerät in das Anastomoseinstrument einbringen.

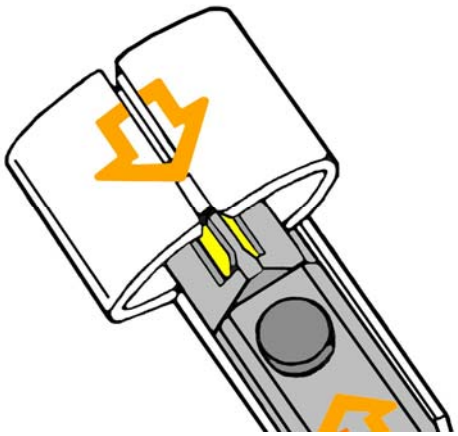

Alle Koppler-Größen

Bei dem Laden müssen die gleichartigen Indikatorpfeile auf dem Koppler-Gerät und dem Anastomoseinstrument aufeinander ausgerichtet sein.
Ein korrektes Laden wird durch einhörbares Klicken angezeigt.

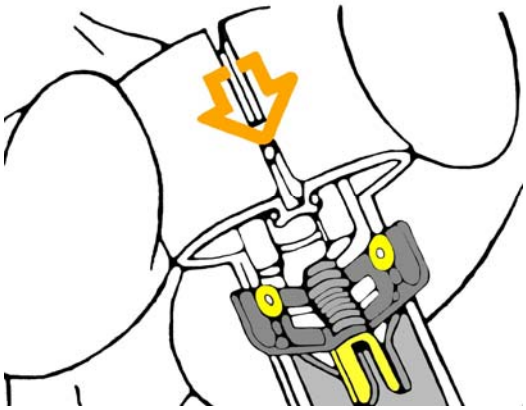

Alle Koppler-Größen

Das Koppler-Gerät durch festes Abziehen vom Anastomoseinstrument aus der Schutzabdeckung entnehmen.

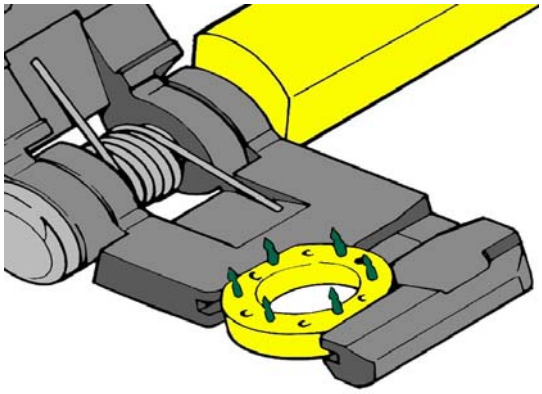

Alle Koppler-Größen

Visuell kontrollieren, dass die Stifte auf den Ringen aufrecht stehen und senkrecht zum Ring zeigen.

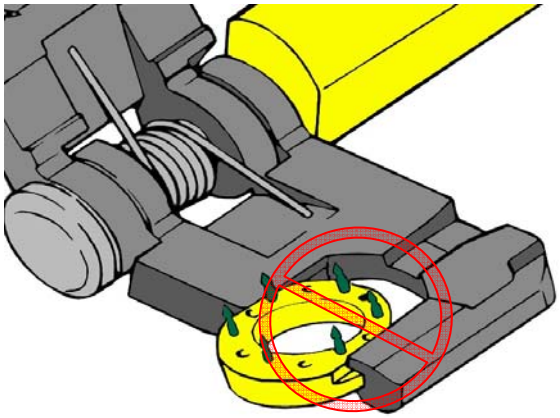

Alle Koppler-Größen

Visuell kontrollieren, dass sich beide Ringe im unteren U-förmigen Abschnitt der Haltevorrichtung befinden.

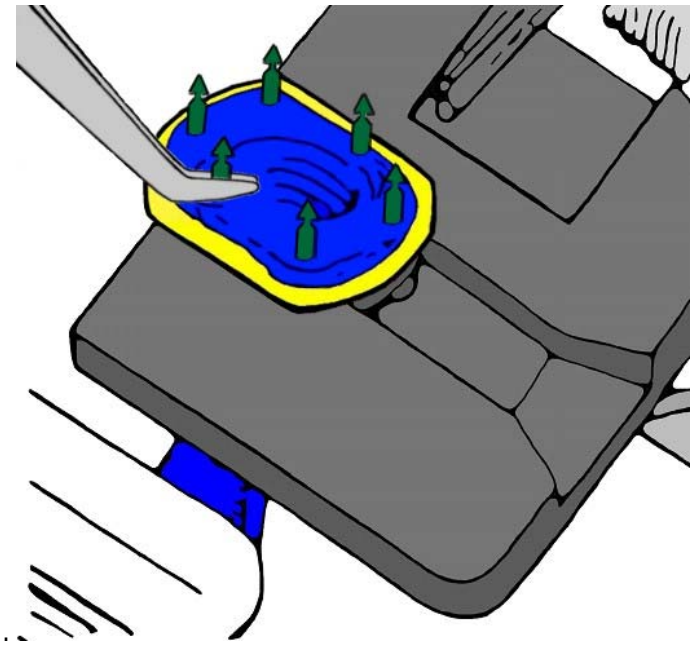

Koppler-Größe bis 3 mm Durchmesser mit 6 Stiften auf jedem Ring

Den Griff des Anastomoseinstruments perpendikulär zum Verlauf des Endgefäßes platzieren. Das Endgefäß wie in der End-zu-End-Anastomose beschrieben auf den 6 Stiften des Ringes auffädeln.

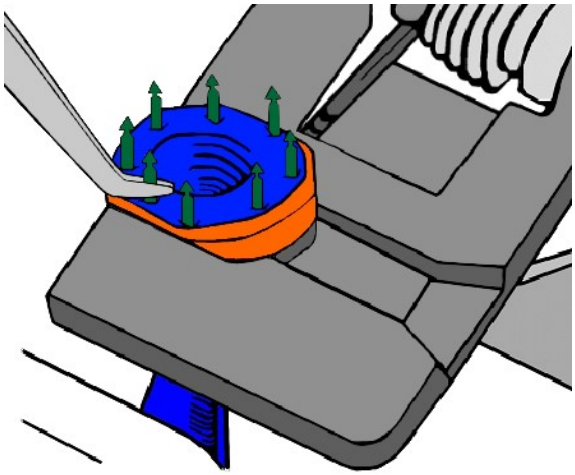

Koppler-Größe ab 3,5 mm Durchmesser mit 8 Stiften auf jedem Ring

Den Griff des Anastomoseinstruments perpendikulär zum Verlauf des Endgefäßes platzieren. Das Endgefäß wie in der End-zu-End-Anastomose beschrieben auf den 8 Stiften des Ringes auffädeln.

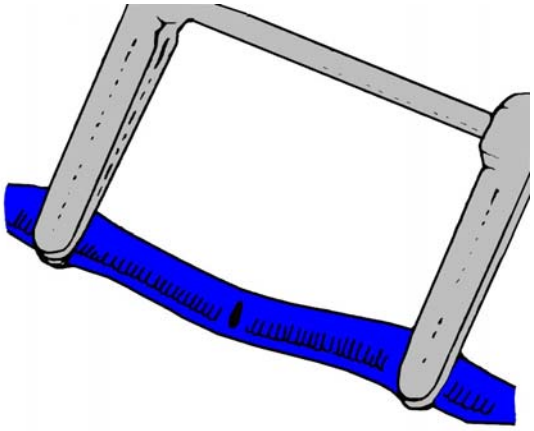

Alle Koppler-Größen

Einen diagonalen Einschnitt in das Seitgefäß anlegen, dessen Länge den inneren Durchmesser des ausgewählten Koppler-Geräts nicht überschreitet. Die Klemmen geringfügig zusammenbringen, um die Spannung zu verringern und die Inzision zu öffnen. Das Gefäßlumen durch die geschaffene Öffnung irrigieren.

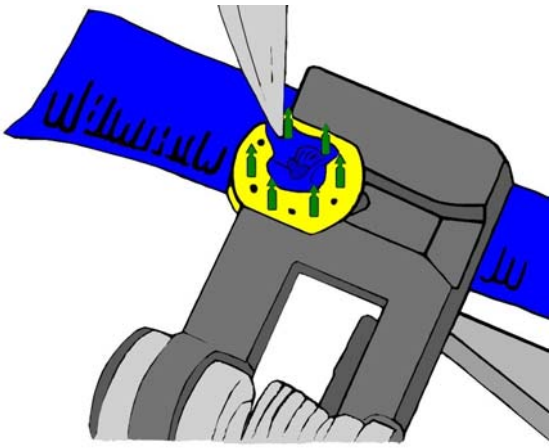

Alle Koppler-Größen

Die Gefäßwand und Intima in der Nähe eines Endes der schrägen Inzision mit einer mikrochirurgischen Pinzette erfassen und durch den verbleibenden Ring ziehen. Gefäßwand und Intima im 180 Grad Winkel ausstülpen und das Gefäß zunächst auf den Stiften in der Nähe des oberen Inzisionsendes auffädeln.

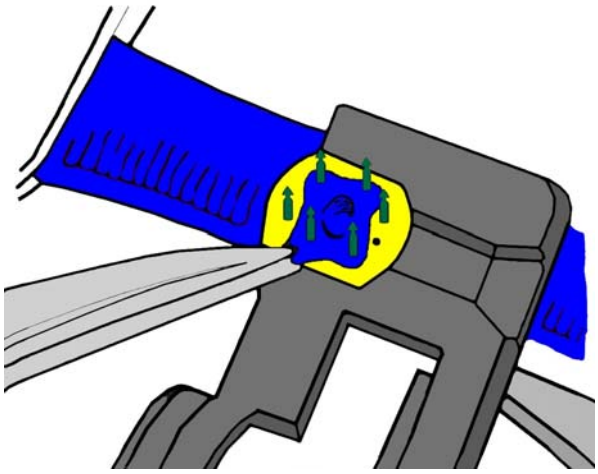

Alle Koppler-Größen

In gleicher Weise am gegenüberliegenden Ende der Inzision fortfahren und Gefäßwand sowie Intima auf die am nächsten zum unteren Inzisionsende gelegenen Stiften auffädeln.

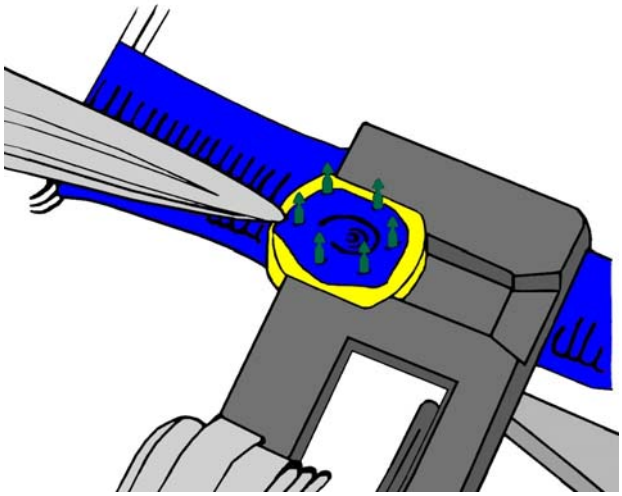

Koppler-Größe bis 3 mm Durchmesser mit 6 Stiften auf jedem Ring

Den Vorgang des Auffädelns abschließen, indem das Gefäß auf die verbleibenden Stifte umgestülpt wird.

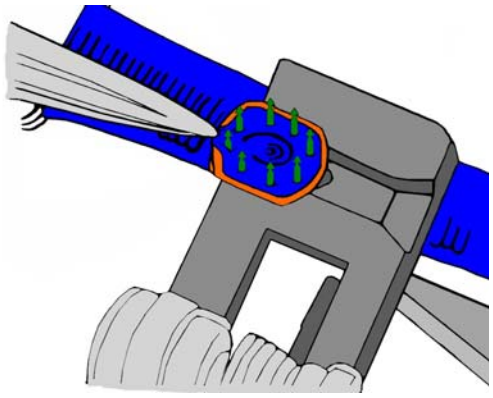

Koppler-Größe ab 3,5 mm Durchmesser mit 8 Stiften auf jedem Ring

Den Vorgang des Auffädelns abschließen, indem das Gefäß auf die verbleibenden Stifte umgestülpt wird.

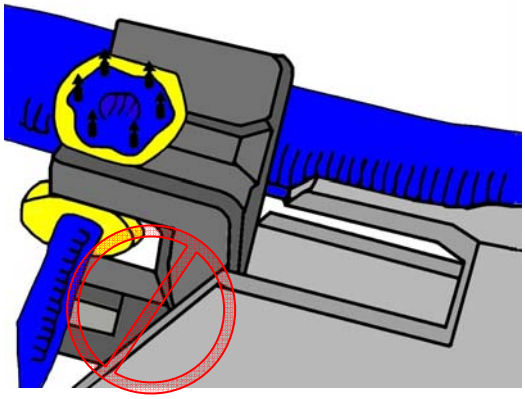

Alle Koppler-Größen

Sicherstellen, dass auf jedem Stift sowohl Gefäßwand als auch Intima vollständig aufgefädelt wurden.
Visuell kontrollieren, dass sich beide Ringe im unteren U-förmigen Abschnitt der Haltevorrichtung befinden.

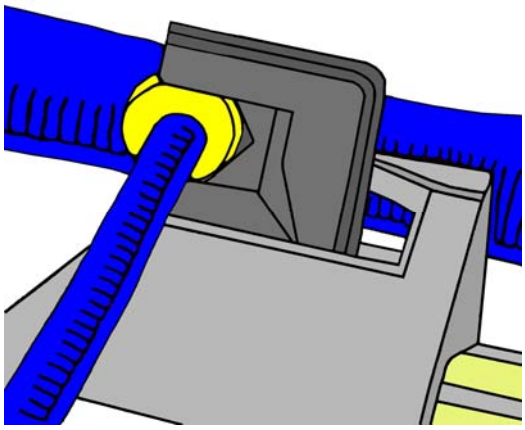

Alle Koppler-Größen

Durch Drehen des Griffes des Anastomoseinstruments im Uhrzeigersinn die Ringe zusammenbringen, nur bis der Auswurfstab anfängt, die nun vereinten Ringe zu bewegen. Dabei das Instrument so halten, dass der Ring des aufgefädelten Endgefäßes bei der Annäherung zum Ring des Seitengefäßes gebracht wird.

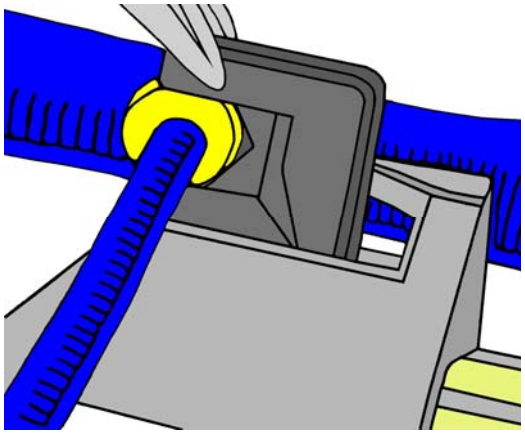

Alle Koppler-Größen

Vor dem Auswurf der vereinten Ringe, das Ende der anliegenden Haltevorrichtungen mit einer Klemme zusammendrücken, um die Einpassung des Rings und eine enge Reibungspassung zu sichern.
Zum Auswurf der vereinten Ringe den Griff des Anastomoseinstruments weiter im Uhrzeigersinn drehen.

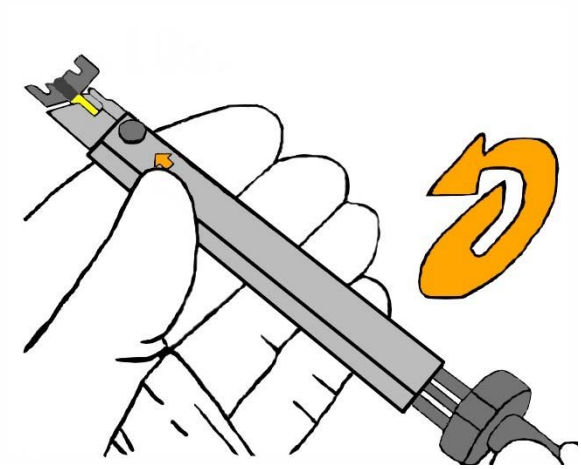

Alle Koppler-Größen

Zur Entfernung der Haltevorrichtung den Griff des Anastomoseinstruments vollständig gegen den Uhrzeigersinn drehen.

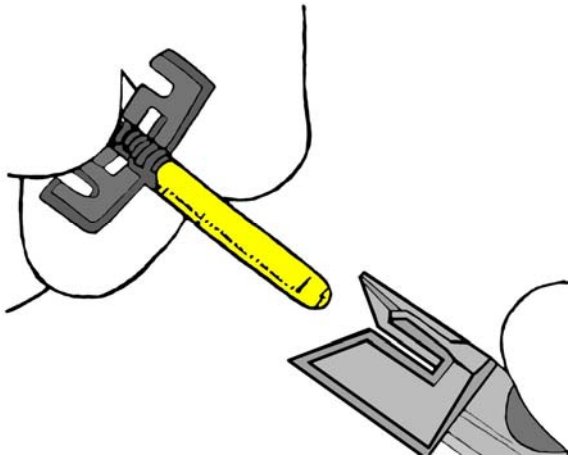

Alle Koppler-Größen

Die Freigabetaste in der Nähe des Pfeils auf dem Anastomoseinstrument drücken und die Haltevorrichtung entfernen.

Hand-Sewn Versus Microvascular Venous Anastomotic Coupler Device in Free Flap Reconstructions for Head and Neck Cancer —— *A Retrospective Study*

Yi-Chun Wu[1], Yu-Hsien Lin[1], Sheng-Po Ho[2], Huwang-Chi Lin[1], Ju-Hsu Jeng[1], Cha-Chun Chen[1], Shang-hsi Lin[1], Wei-Nung Jim Chen[1]

Department of Plastic Surgery[1], Department of Ear, Nose and Throat[2], Shin Kong Wu Ho-Su Memorial Hospital, Taipei, Taiwan

Background:

Head and neck cancers pose a large threat to the people of Taiwan; such cases are usually reconstructed with a free flap after excision of the tumors. Head and neck reconstructions are especially challenging, considering the high rate of complications, such as infection or dehiscence due to the septic environment of the oral or nasal cavity. Microvascular anastomoses for free flap reconstructions are traditionally achieved by hand-suturing interrupted or continuous sutures along the vessel lumen. The procedure of hand-sewn vessel anastomosis is a time-consuming procedure, which leads to prolonged anesthesia, prolonged flap ischemic time, and increased physical fatigue for the surgeon. The microvascular venous anastomotic coupler system offers a solution for the above problems.

Aim and objectives:

We present our experience and results with free flap reconstruction after excision of head and neck cancers, comparing the outcome and complication rate of hand-sewn versus coupler venous anastomoses for head and neck cancers.

Materials and methods:

Between March 2011 and May 2016, a total of 209 patients, consisting of 201 male and 8 female patients, were included in this study retrospectively. The patients were divided into two groups: the Coupler group and the hand-sewn group according to whether the Coupler device was used for venous anastomosis. The patients were documented for past medical history, operative details, and post-operative outcomes.

Results:

All patient demographics showed no statistical difference between the hand-sewn and the Coupler group ($p>0.05$). The average operative time of the hand-sewn group and the Coupler group was 449.8 minutes and 387.9 minutes, respectively, which shows

a significant statistical difference (p <0.001). Compared to the traditional hand-sewn group, the Coupler system has a compatible rate of arterial thrombosis (0.9% vs. 1.1%, p=0.887), partial flap loss (5.2% vs. 5.3%, p=0.974), and total flap failure (2.6% vs. 3.2%, p=0.803). The venous thrombosis rate was lower in the Coupler group (0.9% vs. 4.2%, p=0.112). Flap dehiscence (11.30% vs. 7.5%, p=0.348), wound hematoma (7.8% vs. 4.3%, p=0.29), vessel kinking (1.7% vs. 0%, p=0.2), and wound infection (10.4% vs. 14.9%, p=0.334), all show no statistical difference between the two groups. The hospital admission time of both groups was not statistically different (p=0.288).

Conclusion:

The Coupler device offers a safe and reliable method for venous anastomoses with a compatible or even better rate of flap survival and venous patency, and at the same time greatly decreases the operation time by around 60 minutes. (J Taiwan Soc of Plast Surg 2017;26:274～283)

Key words: reconstruction; free flaps; head and neck; microvascular; venous anastomotic device; coupler; venous coupler

Introduction

Head and neck cancers pose a large threat to the population of Taiwan. According to a report published in 2015 by the Taiwan Health Promotion Administration, Ministration of Health and Welfare, cancers of the oral cavity, oropharynx, and hypopharynx comprise > 7,000 cases per year, which is ranked 5th in terms of incidence among all the cancers. The incidence is also increasing compared to previous annual statistics, and when compared to other Organization for Economic Co-operation and Development (OECD) countries, the incidence and mortality rate is also much higher in Taiwan. The current treatment options for head and neck cancer include surgical treatment, radiotherapy, chemotherapy, and targeted therapy. There is much to be discussed about the effectiveness of adjuvant or neoadjuvant chemotherapy/radiotherapy and targeted therapy, but surgical treatment is still the mainstay and the only possible method of cure. Common components of surgical treatment include a wide excision of the tumor and a modified radical neck dissection and a free or regional flap is often required to reconstruct the tissue defect after wide excision is performed by the surgical oncologist.

The concept of a reconstruction ladder is not entirely adaptable when considering the functional and cosmetic outcomes of a patient after resection for head and neck cancers. In most cases, the choice of a free flap reconstruction provides the best result. The most critical and skill-demanding step of a free flap reconstruction is arguably the microvascular anastomoses; furthermore, venous anastomoses are generally considered even more skill-demanding than arterial anastomoses.

Microvascular anastomoses for free flap reconstruction are traditionally achieved through interrupted or continuous hand suturing along the vessel lumen with non-absorbable sutures. Previous studies on the free flap reconstruction for head and neck cancers revealed an overall rate of flap failure between 2–5%.[2-6]

Since the first venous anastomoses device was introduced in 1962 by Nakayama[1], usage of similar devices have increased for free flap reconstructions, including the microvascular venous anastomotic coupler device ('Coupler device') manufactured by Synovis Life Technologies, which has been used in microvascular anastomoses since the 1980s. The Coupler device offers a faster, more reliable, and generally affordable method for microvascular venous anastomoses. We have been

using the Coupler device in our free flap surgeries for head and neck reconstructions since 2014. This study aimed to evaluate the outcome of free flap reconstructions in head and neck cancers using the Coupler device compared to traditional hand-sewn anastomoses.

Materials and methods

Operative considerations

The majority of head and neck cancer surgeries in our hospital are performed by a single ear, nose, and throat (ENT) surgeon and a plastic surgeon, and most reconstructions are carried out using the free flap. The free flap reconstruction phase is carried out only after completion of the tumor resection and neck dissection by the ENT surgeons. The most commonly chosen free flaps in our hospital are the radial forearm fasciocutaneous free flap, the anterolateral thigh fasciocutaneous free flap, and the fibular osteocutaneous free flaps. The choice of which free flap to harvest is made after evaluation of the tissue defect and also taking into consideration the occupation, age, history of trauma or surgery of involved areas, and the comorbidities of the patient. Microvascular arterial anastomoses are usually hand-sewn in an end-to-end fashion with 9-O nylon sutures; meanwhile the venous anastomoses are usually done in an end-to-end fashion with the aforementioned microvascular anastomotic coupler device manufactured by Synovis Life Technologies since the introduction of this product to our hospital in 2014. The patient is usually kept intubated and sedated while being sent to our surgical intensive care unit (SICU) for post-operative care. Extubation is usually done on the 1st or 2nd post-operative day and the patient is then transferred back to our ward unless complications occur, the total survival of the flap is questioned, or the patient is likely to present problems with his/her airway or breathing. No anticoagulants or vasodilators are routinely used post-operatively, and vasoconstrictors are avoided if possible.

All of the patients admitted after January 2014 were suggested to use the microvascular anastomotic coupler device for venous anastomoses and were only excluded from usage if they could not afford the self-paid fee for the device, which was about 12500 NT dollars (about 390 USD) per coupler. The venous anastomoses of the patients who did not use the Coupler device were performed with 9-O nylon interrupted sutures.

Patient selection and characteristics

A total of 209 free flaps with 385 venous anastomoses were included in this study. To eliminate technical and experience differences, only patients operated by the same ENT and plastic surgeon and those who received a free flap reconstruction between March 2011 and May 2016, were included retrospectively. Patients were excluded if they underwent a double free flap reconstruction. No other patients were excluded for any other reason. The patients were divided into two groups: the Coupler group and the hand-sewn group according to whether the Coupler device was used for venous anastomosis. The average age of patients was 53.9 years (range=20-94, SD=10.8). The patients were documented for their social habits of smoking and medical history of pre-operative radiotherapy, diabetes, and hypertension (Table 1).

Surgical measurements

Surgical measurements recorded included the type of flap harvested, total number of venous anastomoses, method of venous anastomosis, and the total operative time. The operative time was calculated starting from the time of the first incision made by the plastic surgeon to the end of the whole operation, the ENT surgeon's operation time was not taken into calculation.

Outcome evaluation

Post-operative outcome evaluations included minor complications, major complications, and hospital admission time. Minor complications are defined as the occurrence of flap dehiscence, vessel kinking or torsion, wound hematoma, wound infection, or delayed partial necrosis of the flap. Major complications included arterial thrombosis, venous thrombosis, or total flap failure including those with an unknown cause.

Flap dehiscence is recorded if the flap shows viability without obvious infection or necrosis and the complication lies solely in the failure to heal between local tissue and the free flap edge. Kinking or torsion of the vessels is diagnosed according to re-exploratory findings and this implies that the artery and veins are patent but the complication is caused by faulty setting of the flap, the anastomosed vessel, or both. Wound hematoma is defined as a large amount of blood clot or fresh blood accumulation in the wound that required surgical re-exploration despite viability of the flap. It is worth mentioning that none of the post-operative hematomas in this study was caused by leakage or rupture of the anastomotic site. Wound infection is diagnosed according to clinical presentations, blood tests, and bacterial wound cultures. Partial flap loss or necrosis is defined as flap loss < 50% of the total surface area while total flap loss is defined as flap necrosis >50% followed by required surgical removal of the non-viable flap. Arterial or venous thrombosis is diagnosed according to clinical observations of the flap and re-exploratory findings.

Results

Patient demographics

Between March 2011 and May 2016, a total of 209 patients, consisting of 201 male and 8 female patients, were included in this study. History of smoking was present in 78.5% of patients. Diabetes mellitus and hypertension were documented in 20% and 34.5% of patients, respectively. History of pre-operative radiotherapy was present in 26.8% patients. All patient demographics showed no statistical difference between the hand-sewn and the Coupler group (p>0.05).

Free flap types and intra-operative details

A total of 209 flaps were included in this study, which mainly compose of radial forearm fasciocutaneous free flaps (n=90), anterolateral thigh fasciocutaneous free flaps (n=79), fibular osteocutaneous free flaps (n=32), and medial sural fasciocutaneous free flaps (n=8) as shown in table 1. Note that the percentages of flap type compositions show no difference between the two groups.

The average operative time of the hand-sewn group and the Coupler group was 449.8 minutes and 387.9 minutes, respectively, which shows a significant statistical difference (p <0.001). The average number of venous anastomosis per flap was 1.76 in the hand- sewn group and 1.90 in the Coupler group (p=0.013).

Post-operative complications and outcomes

Compared to the traditional hand-sewn group, the Coupler system has a compatible rate of arterial thrombosis (0.9% vs. 1.1%, p=0.887), partial flap loss (5.2% vs. 5.3%, p=0.974), and total flap failure (2.6% vs. 3.2%, p=0.803). The venous thrombosis rate was lower in the Coupler group (0.9% vs. 4.2%, p=0.112) although not low enough to show a statistical difference. Other complications, including flap dehiscence (11.30% vs. 7.5%, p=0.348), wound hematoma (7.8% vs. 4.3%, p=0.29), vessel kinking (1.7% vs. 0%, p=0.2), and wound infection (10.4% vs. 14.9%, p=0.334), all show no statistical difference between the two groups. The hospital admission time of both groups was not statistically different (p=0.288). A significant difference was noticed in the average operative time, which is 387.9 minutes in the Coupler group and 449.8 minutes in the hand-sewn group (p<0.001; Table 2)

Discussion

The procedure of hand-sewn vessel anastomosis is a time consuming procedure, which leads to prolonged anesthesia, prolonged flap ischemic time, and more physical-fatigue for the surgeon. Venous anastomosis plays a critical role in free flap surgery and a failed venous anastomosis is often the leading cause of flap failure[5].

Nakayama et al. developed metal rings with evenly placed pins for small vessel anastomosis in 1962[1], which has been modified by many since then. The Coupler device we currently use is composed of two small plastic rings with 6 evenly placed metal pins and a hand piece for holding and clamping the two rings together (Fig. 1-4). A properly placed Coupler device should provide direct intima-to-intima contact of the

anastomosed vessels without any foreign bodies in the vessel lumens thus minimizing the chance of flow turbulence and thrombus formation.

Traditionally, hand-sewn microsurgical anastomoses for free flap reconstructions hold a venous thombosis rate of around 2-9%[2-6]. When reviewing the literature, venous anastomoses performed with the microvascular coupling anastomotic device hold a venous thrombosis rate at around 1-5% and a flap survival rate at around 95-100%. The higher thrombosis and failure rates are seen in the head and neck cancer and lower extremity traumatic reconstruction cases[7-15]. Theoretically, the blood flow through a Coupled vessel lumen holds a lower thrombogenic profile than a sutured anastomoses as demonstrated by Wain et al[18]. In reality, most of the reports show a compatible result of the microvascular coupling anastomotic device compared to hand-sewn anastomoses and some even show a superior outcome in means of flap survival and venous thrombosis.

We have been using the venous anastomotic Coupler system since 2014 and in our experience; the device offers a safe and reliable method for venous anastomoses and at the same time greatly decreases the operation time by around 60 minutes. We routinely perform two venous anastomoses, sometimes three if possible. Additional repair for leakages is sometimes required in hand-sewn anastomoses, especially when a large vessel size discrepancy exists. Most of our Couplers are sized 2.0 mm and 2.5 mm, but 1 mm–3.5 mm rings are also occasionally used. Broer et al. found that complications are more seen with Couplers of 2 mm or less[16], Zhang et al. stated that two venous anastomoses hold a better outcome than a single venous anastomosis[13]. In general, size and numbers do matter, but the specific size and number of anastomoses should be chosen according to the operative findings. With the Coupler use, additional hand-sewn repairs are almost never required; thus, a lot of time is saved. We have experience of Coupler end-to-end anastomosis with veins up to three times in size discrepancy, which was also mentioned feasible by Sullivan et al. in 2003[17]. The discrepancy can be managed by an oblique cut of the vessel with careful placement of the pins and accurate choice of size of the Coupler device.

In our study, the success rate and complication rate including wound infections in patients who underwent surgeries using the Coupler system are compatible to traditionally hand-sewn anastomoses; no significant statistical difference was noticed between the two groups. However, when focusing on the complications that are most closely associated with flap survival, a trend was noticed towards the hand- sewn-group, which presents a slightly higher rate of arterial thrombosis, partial flap loss, and total flap failure in that group. Most important, the venous thrombosis rate was much lower in the Coupler group than the hand-sewn group (0.9% vs. 4.2%, p=0.112). In our study, the rate of total flap failure was 2.87%, which is compatible with the literature.

The rate of vessel kinking was 0% in the hand-sewn group but 1.74% of Coupler groups presented vessel kinking, which was found during re-exploration surgery (p=0.19). This highlights a possible problem with the Coupler system, which is less common in traditionally hand-sewn anastomoses. The bulk of the Coupler ring, when poorly placed, may cause vessel kinking and compression of adjacent vessels, especially when the two anastomosed veins are very close to each other or when the recipient vein stump is very short. However, with meticulous planning before applying the Coupler rings, this complication can be easily avoided.

The average operation time is significantly shorter in the Coupler group ($p<0.001$) due to several reasons. First, the technique to apply the Coupler rings is much faster and simpler than hand sewing the lumen, even when a disproportion exists between the size of the donor and recipient lumens. In our experience, with adequate preparation, a single Coupler anastomosis can usually be done within 5 minutes and the learning curve is much easier than that of sewing veins by hand. Second, additional sutures due to leakage are almost never needed with the Coupler device when the proper size of Coupler ring is chosen and applied by an experienced micro-surgeon. The number of venous anastomosis per flap was more in the Coupler group (1.76 in hand sewn group and 1.90 in Coupler group) which showed a statistical difference (p=0.013), meaning we were able to perform more venous anastomoses in

much less time.

Another advantage of the Coupler device was noticed in few cases requiring re-exploration. In our experience, despite tissue adhesion, hematoma and fibrotic tissue formation, or other complicated scenarios, the Coupler ring and thus the venous and artery anastomotic sites can often be easily identified and checked during re-exploration surgery. This advantage greatly decreases the re-exploration operative time as mentioned by Coroneos et al.[19]

No significant drawbacks concerning Coupler usage apart from the financial cost were highlighted during our literature review. A rare case of Coupler migration to the skin resulting in chronic ulcer was reported by Zomerlei and Komorowska-Timek[20]. We have not encountered similar incidences and, in our opinion, the possibility of such a problem should be very low if the ring is not placed too superficial to the skin.

Currently, the Coupler device in our hospital costs an extra fee of about 12500 NTD per ring for the patient, which we think is worth the extra money considering the numerous advantages of the device.

Table 1. Patient demographics and flap types

	Hand-Sewn Group	Coupler Group	Total	P value
Number of patients	94	115	209	-
Mean age	53.0(SD=10.5)	54.5(SD=11.0)	53.9(SD=10.8)	-
Gender(M/F)	90/4	111/4	201/8	-
Smoking	75(79.7%)	89(77.3%)	165(78.5%)	0.676
Diabetes	15(15.9%)	27(23.4%)	42(20%)	0.178
Hypertension	27(28.7%)	45(39.1%)	72(34.5%)	0.116
Pre-Op R/T	25(26.6%)	31(26.9%)	56(26.8%)	0.953
Type of flaps(n) R/A/F/S	43/32/15/4	47/47/17/4	90/79/32/8	0.743
Number of venous anastomoses per flap	1.76	1.90	1.84	0.013

R/T, radiotherapy; R, radioforearm fasciocutaneous free flap; A, anterolateral thigh free flap; F, fibular osteocutaneous free flap; S, medial sural fasciocutaneous free flap

Table2. Outcomes and time measurements

		Hand-Sewn Group	Coupler Group	Total	P value
Major complications	Total flap loss	3(3.2%)	3(2.6%)	6(2.9%)	0.803
	Arterial thrombosis	1(1.1%)	1(0.9%)	2(0.9%)	0.887
	Venous Thrombosis	4(4.2%)	1(0.9%)	5(2.4%)	0.112
Minor complications	Flap dehiscence	7(7.5%)	13(11.3%)	20(9.6%)	0.348
	Wound hematoma	4(4.3%)	9(7.8%)	13(6.2%)	0.290
	Vessel kinking	0	2(1.7%)	2(1.0%)	0.2
	Wound infection	14(14.9%)	12(10.4%)	26(12.4%)	0.334
	Partial flap loss	5(5.3%)	6(5.2%)	11(5.2%)	0.974
Time measurements	Average operation time (mins)	449.8 (SD=104.7)	387.9 (SD=105.2)	415.7 (SD=109.4)	<0.001
	Average hospital admission time (days)	19.2	20.5	19.9	0.288

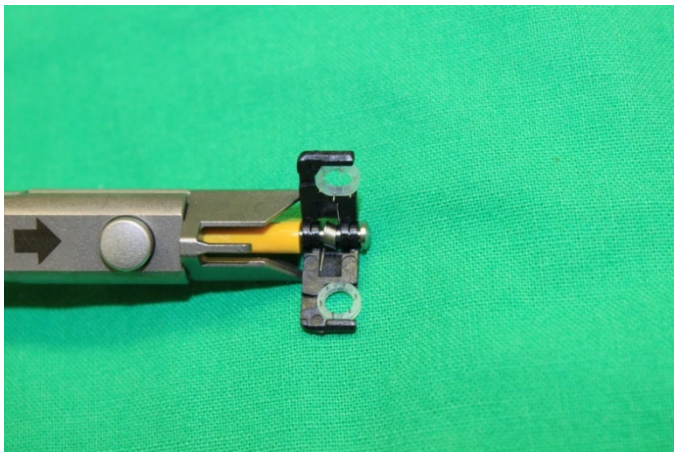

Fig. 1. Coupler rings with metal pins on the holding instrument. This is a 3mm sized ring.

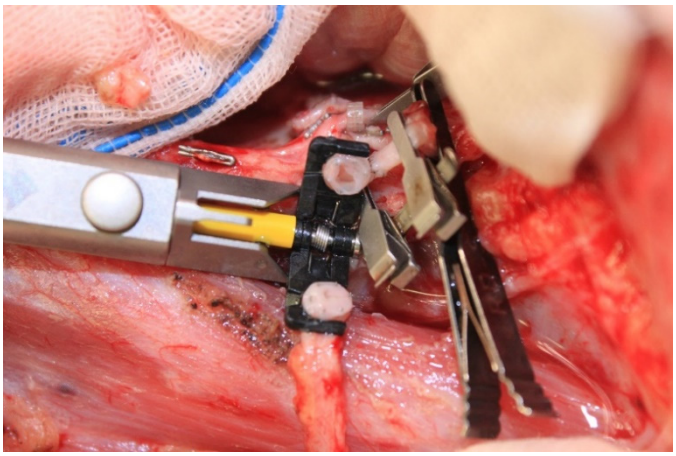

Fig. 2. Coupler rings after eversion of the venous lumen onto the metal pins.

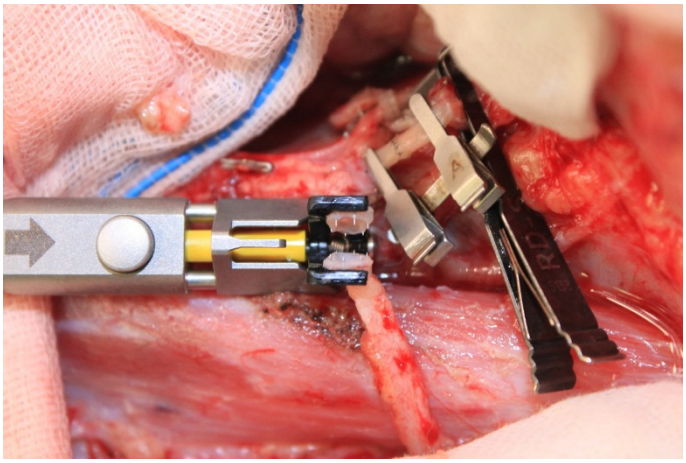

Fig. 3. Clamping the Coupler holding device.

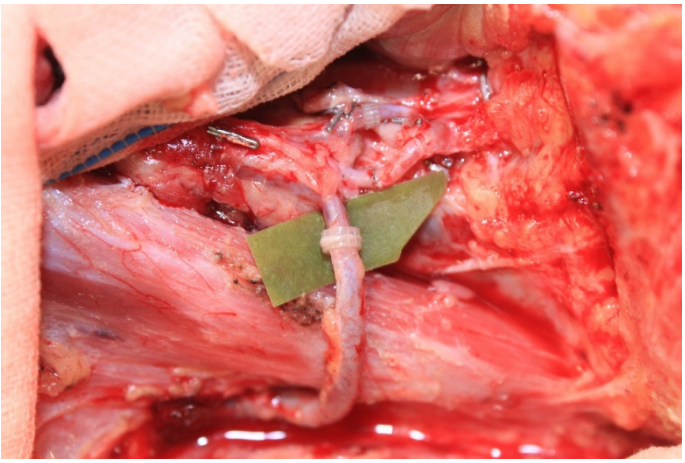

Fig. 4. Patent venous flow with no leakage after releasing the vessel clamps.

Conflict of Interest Disclosure

No financial support or benefits have been received from any commercial source, which is related directly or indirectly to the scientific work reported in this article.

Reference

1. Nakayama K, Tamiya T, Yamamoto K et al.A simple new apparatus for small vessel anastomosis (free autograft of the sigmoid included). Surgery. 1962;52:918–931.
2. Ishimaru M, Ono S, Suzuki S et al. Risk Factors for Free Flap Failure in 2,846 Patients With Head and Neck Cancer: A National Database Study in Japan. J Oral Maxillofac Surg. 2016;74:1265–1270.
3. Lee M, Chin RY, Eslick GD et al. Outcomes of microvascular free flap reconstruction for mandibular osteoradionecrosis: A systematic review. J Craniomaxillofac Surg. 2015;43:2026-2033
4. Chang EI, Zhang H, Liu J et al. Analysis of risk factors for flap loss and salvage in free flap head and neck reconstruction. Head Neck. 2016;38 (Suppl 1):E771-E775.
5. Zhang C, Sun J, Zhu H et al. Microsurgical free flap reconstructions of the head and neck region: Shanghai experience of 34 years and 4640 flaps. Int J Oral Maxillofac Surg. 2015;44:675-84.
6. Ettinger KS, Arce K, Lohse CM et al. Higher perioperative fluid administration is associated with increased rates of complications following head and neck microvascular reconstruction with fibular free flaps. Microsurgery. 2016;. doi: 10.1002/micr.30061.
7. Li R, Zhang R, He W et al. The Use of Venous Coupler Device in Free Tissue Transfers for Oral and Maxillofacial Reconstruction. J Oral Maxillofac Surg. 2015;73:2225-2231.
8. O'Connor EF, Rozen WM, Chowdhry M et al. The microvascular anastomotic coupler for venous anastomoses in free flap breast reconstruction improves outcomes. Gland Surg. 2016;5:88-92.
9. Kulkarni AR, Mehrara BJ, Pusic AL et al. Venous Thrombosis in Handsewn versus Coupled Venous Anastomoses in 857 Consecutive Breast Free Flaps. J Reconstr Microsurg. 2016; 32:178-182.
10. Ardehali B, Morritt AN, Jain A. Systematic review: anastomotic microvascular device. J Plast Reconstr Aesthet Surg. 2014;67:752-755.
11. Grewal AS, Erovic B, Strumas N et al. The utility of the microvascular anastomotic coupler in free tissue transfer. Can J Plast Surg. 2012;20:98-102.
12. Frederick JW, Sweeny L, Carroll WR et al. Microvascular anastomotic coupler assessment in head and neck reconstruction. Otolaryngol Head Neck Surg. 2013;149:67-70.
13. Zhang T, Lubek J, Salama A et al. Venous anastomoses using microvascular coupler in free flap head and neck reconstruction. J Oral Maxillofac Surg. 2012;70:992-996.
14. Jandali S, Wu LC, Vega SJ et al. 1000 consecutive venous anastomoses using the microvascular anastomotic coupler in breast reconstruction. Plast Reconstr Surg. 2010;125:792-798.
15. Ahn CY, Shaw WW, Berns S et al. Clinical experience with the 3M microvascular coupling anastomotic device in 100 free-tissue transfers. Plast Reconstr Surg. 1994;93:1481-1484.
16. Broer PN, Weichman KE, Tanna N et al. Venous coupler size in autologous breast reconstruction–does it matter? Microsurgery. 2013;33:514-518.
17. Sullivan SK, Dellacroce F, Allen R. Management of significant venous discrepancy with microvascular venous coupler. J Reconstr Microsurg. 2003;19:377-380
18. Wain RA, Whitty JP, Dalal MD et al. Blood flow through sutured and coupled microvascular anastomoses: a comparative computational study. J Plast Reconstr Aesthet Surg. 2014;67:951-959.
19. Coroneos CJ, Voineskos SH, Heller AM et al. Reduced venous thrombosis and re-exploration time with anastomotic coupling device: A cohort study. Microsurgery. 2015. doi: 10.1002/micr. 30017
20. Zomerlei TA, Komorowska-Timek E. Venous coupler migration: a near miss. Microsurgery. 2014;34:331-332.

Reprints request from: Yu-Hsien Lin, M.D.
Division of Plastic surgery, Shin Kong Wu Ho-Su Memorial Hospital
Address: 95, Wen Chang Rd., Shih Lin District, Taipei, Taiwan 111, R.O.C
Tel: (02) 2833-2211 ext.2081
Fax: (02) 2838-9404
E-mail: lancelordlin@gmail.com

1000 Consecutive Venous Anastomoses Using the Microvascular Anastomotic Coupler in Breast Reconstruction

Shareef Jandali, M.D.
Liza C. Wu, M.D.
Stephen J. Vega, M.D.
Stephen J. Kovach, M.D.
Joseph M. Serletti, M.D.

Philadelphia, Pa.; and Rochester, N.Y.

Background: Microvascular anastomosis is one of the more critical aspects of free flap surgery. A safe, effective, and expedient method for venous anastomosis minimizes flap ischemia time, is easier on the surgical team, and saves costly operating room time. The authors report on their experience using the Synovis microvascular anastomotic coupling device in 1000 consecutive venous anastomoses in free flap breast reconstruction.

Methods: The authors retrospectively reviewed 1000 consecutive venous anastomoses that were performed using the microvascular anastomotic coupler between July of 2002 and July of 2008. Data were obtained on flap type, recipient vessel, coupler size, incidence of venous thrombosis, timing of venous thrombosis, and morbidity as a result of venous thrombosis.

Results: All anastomoses were performed in an end-to-end fashion. There were 460 unilateral cases and 270 bilateral cases of breast reconstruction. Flap types included muscle-sparing free transverse rectus abdominis myocutaneous, deep inferior epigastric perforator, superficial inferior epigastric artery, superior gluteal artery perforator, and inferior gluteal artery perforator. The vast majority of the recipient vessels were the internal mammary or thoracodorsal vessels. Most of the couplers that were used were either 3 or 2.5 mm in diameter. Overall, there were six instances of venous thrombosis (rate of 0.6 percent). There were no total flap losses due to venous thrombosis in this series, although two patients had partial flap necrosis.

Conclusions: The patency rate for venous anastomoses performed with the microvascular coupler is excellent when compared with standard suture techniques and has the advantage of overall easier application. (*Plast. Reconstr. Surg.* 125: 792, 2010.)

Microvascular anastomosis is one of the more critical aspects of free flap surgery. Most incidences of free flap failure are due to technical problems with the anastomosis and resultant thrombosis of the vessel. Anastomoses, both arterial and venous, have traditionally been hand-sewn using 8-0 or 9-0 permanent suture. In addition, the venous anastomosis has been recognized as being more technically demanding than the arterial anastomosis. Several years ago, a more rapid mechanical connecting device, referred to as the coupler, was introduced as an alternative to the hand-sewn process for venous anastomosis.

The current coupling device was initially manufactured by 3M Healthcare (St. Paul, Minn.) and is currently manufactured by Synovis Micro Companies Alliance, Inc., a subsidiary of Synovis Life Technologies, Inc. (St. Paul, Minn.). The device consists of two disposable rings made of high-density polyethylene, with a series of six to eight (depending on the size of the coupler) stainless steel pins evenly spaced around each ring. The rings are

From the Division of Plastic Surgery, University of Pennsylvania Health System, and the Division of Plastic Surgery, University of Rochester Medical Center.
Received for publication April 20, 2009; accepted September 4, 2009.
Presented at the 2009 Annual Meeting of the American Society for Reconstructive Microsurgery, in Maui, Hawaii, January 10 through 13, 2009.
Copyright ©2010 by the American Society of Plastic Surgeons
DOI: 10.1097/PRS.0b013e3181cb636d

Disclosures: *Funding for this study was provided by Synovis Surgical Innovations (St. Paul, Minn.). The authors have no commercial association or financial interest to disclose.*

Copyright © American Society of Plastic Surgeons. Unauthorized reproduction of this article is prohibited.

manufactured with inner diameters that range in size from 1.0 to 4.0 mm, allowing anastomoses of vessels that are 1.0 to 4.5 mm in diameter.

The device has been used in microvascular breast, head and neck, and extremity surgery, with patency rates apparently comparable to those with conventional hand-sewn suture techniques.[1–10] This device, however, is not universally used by reconstructive microsurgeons. We reviewed our large two-center experience of autologous microvascular breast reconstruction with use of the coupler for venous anastomosis so as to provide additional data on the effectiveness of this technique.

PATIENTS AND METHODS

Hospital records, operative reports, coupler records, and office charts were retrospectively reviewed in 1000 consecutive venous anastomoses that were performed using the microvascular anastomotic coupler between July of 2002 and July of 2008. Beginning in July of 2002, the coupler completely replaced the hand-sewn technique for venous anastomosis. Hand-sewn anastomoses were rarely performed during the study period; almost all of these were veins that had been subjected to previous irradiation and lacked the distensability for coupler application. For this reason, a history of irradiation to the chest was not recorded because this would have caused a selection bias.

The clinical setting was two major teaching medical centers. The procedures were all performed by one of the four senior authors, all experienced microsurgeons. Indications included immediate or delayed breast reconstruction after mastectomy for breast cancer or breast cancer prophylaxis. Data were obtained on flap type, recipient vessel, coupler size, incidence of venous thrombosis, timing of venous thrombosis, and morbidity as a result of venous thrombosis. Statistical analysis was performed using Fisher's exact test, and comparisons were made between the type of flap used and the rate of venous thrombosis.

Coupler Application Process

The recipient and donor vein are occluded with separate vascular clamps and placed in a position close to one another. A vessel-measuring gauge is used to determine the correct coupler size (Fig. 1). The true vessel diameter should be slightly larger than the marked diameter on the measuring device. In other words, if the diameter of the vein is exactly equal to the 3-mm-diameter mark on the measuring device, then the 2.5-mm-diameter coupler should be selected. After the appropriate-sized coupler is selected, first the donor vein, followed by the recipient vein, is attached to its individual coupling component. The ends of the vessels to be anastomosed are pulled through the opposing rings and everted onto the pins. The vessel edge is first everted onto three pins, creating a triangle and evenly anchoring the vessel onto the ring. The vessel is then hooked on the remaining three pins, ensuring that the vessel wall is completely everted and splayed onto the ring (Fig. 2). The vessels are irrigated with heparinized saline, and then the instrument knob is rotated to mate the vessel ends (Fig. 3). Forceps are used to compress the two rings together as they are pushed out of the end of the instrument (Fig. 4). The force of the coupler device may sometimes not be adequate to fully pierce the opposing vessel wall with the pins and ensure a tight apposition of the interlocking pins and rings.

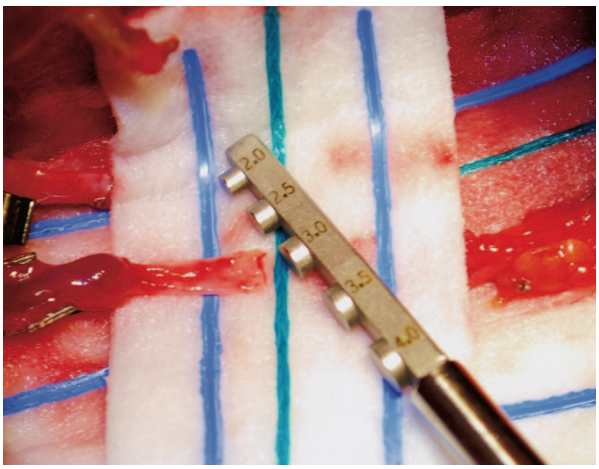

Fig. 1. Vessel measuring gauge.

RESULTS

All patients were women, and follow-up ranged from 1 month to 6 years. There were a total of 460 cases of unilateral breast reconstruction and 270 cases of bilateral breast reconstruction.

Flap types included muscle-sparing free transverse rectus abdominis myocutaneous (TRAM; n = 572, 57.2 percent), deep inferior epigastric perforator (DIEP; n = 305, 30.5 percent), superficial inferior epigastric artery (SIEA; n = 108, 10.8 percent), superior gluteal artery perforator (SGAP; n = 10, 1 percent), and inferior gluteal artery perforator (IGAP; n = 5, 0.5 percent) (Table 1).

Recipient vessels included internal mammary (n = 685, 68.5 percent), thoracodorsal (n = 311,

Copyright © American Society of Plastic Surgeons. Unauthorized reproduction of this article is prohibited.

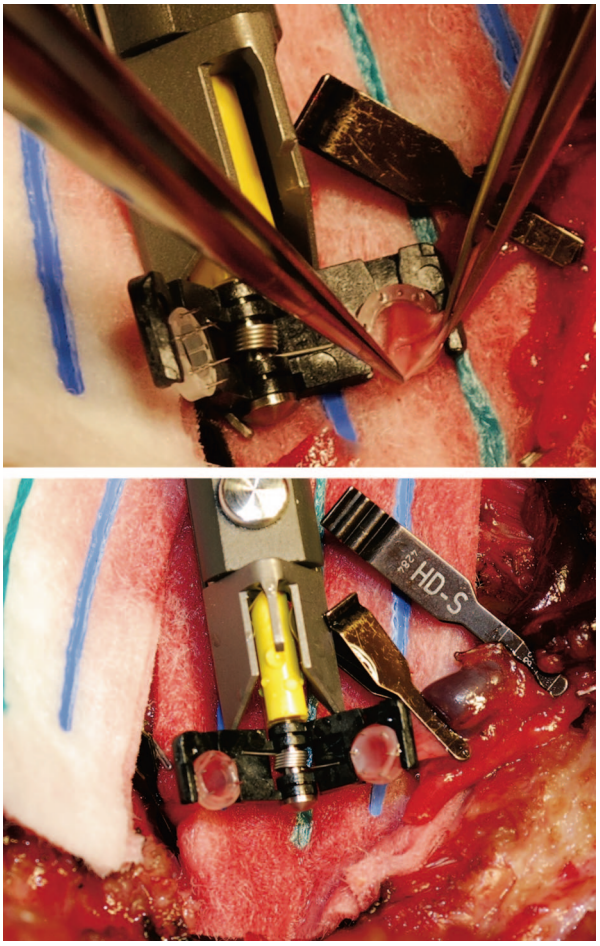

Fig. 2. (*Above* and *below*) Ends of the vessels are pulled through the opposing rings and everted onto the pins.

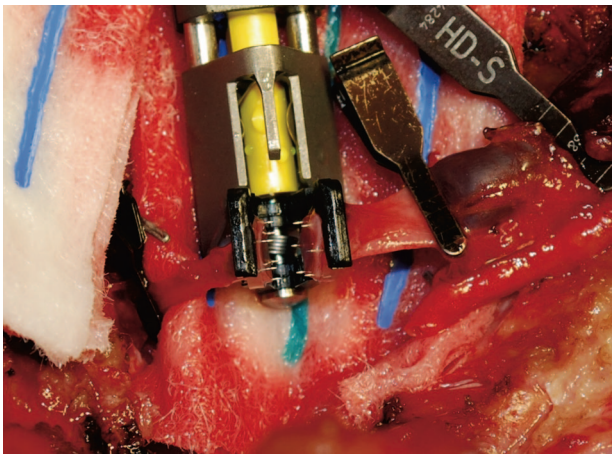

Fig. 3. Coupler knob is rotated to mate vessel ends.

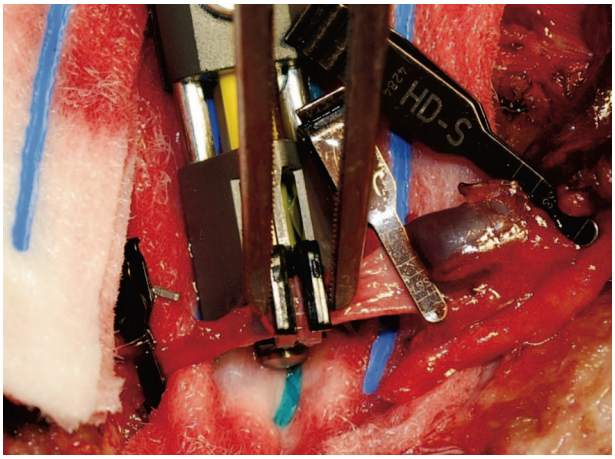

Fig. 4. Forceps are used to ensure a tight apposition of the rings as they are pushed out of the end of the instrument.

Table 1. Flap Type

Flap Type	*n* (%)	Percent Thrombosis
Muscle-sparing free TRAM	572 (57.2)	0.7 (4/572)
DIEP	305 (30.5)	0.3 (1/305)
SIEA	108 (10.8)	0 (0/108)
SGAP	10 (1.0)	0 (0/10)
IGAP	5 (0.5)	20 (1/5)

TRAM, transverse rectus abdominis myocutaneous; DIEP, deep inferior epigastric perforator; SIEA, superficial inferior epigastric artery; SGAP, superior gluteal artery perforator; IGAP, inferior gluteal artery perforator.

Table 2. Recipient Vessel Used

Recipient Vessel	*n* (%)	Percent Thrombosis
Internal mammary	685 (68.5)	0.6 (4/685)
Thoracodorsal	311 (31.1)	0.6 (2/311)
Lateral thoracic	4 (0.4)	0 (0/4)

31.1 percent), and lateral thoracic vessels ($n = 4$, 0.4 percent; Table 2). All anastomoses performed with the coupler were end-to-end anastomoses. In cases in which two internal mammary veins were present, the larger of the two veins was always chosen for the anastomosis. In 15 of the free TRAM and DIEP cases, a second vein, usually the superficial inferior epigastric vein, was coupled in addition to the primary venous anastomosis. This was usually done because of intraoperative venous congestion in the flap that was not due to thrombosis of the primary coupled anastomosis but rather a poor inherent venous drainage pattern of the flap. These extra venous anastomoses were not counted in the final numbers shown here, and it should be noted that none of these cases had any instances of venous thrombosis.

Coupler sizes that were used included 3.0 mm ($n = 852$, 85.2 percent), 2.5 mm ($n = 130$, 13 percent), 2.0 mm ($n = 14$, 1.4 percent), 3.5 mm ($n = 2$, 0.2 percent), 1.5 mm ($n = 1$, 0.1 percent), and 4.0 mm ($n = 1$, 0.1 percent; Table 3). The

Copyright © American Society of Plastic Surgeons. Unauthorized reproduction of this article is prohibited.

Table 3. Coupler Size Used

Coupler Size	*n* (%)	Percent Thrombosis
3.0 mm	852 (85.2)	0.9 (5/852)
2.5 mm	130 (13.0)	0.8 (1/130)
2.0 mm	14 (1.4)	0 (0/14)
3.5 mm	2 (0.2)	0 (0/2)
1.5 mm	1 (0.1)	0 (0/1)
4.0 mm	1 (0.1)	0 (0/1)

time to perform a coupled anastomosis was measured in 20 consecutive cases near the end of the retrospective review to account for any learning curve in use. The average time to couple the vein was 3 minutes, with a range of 2 to 6 minutes.

There were a total of six instances of venous thrombosis ($n = 6$), which give a rate of thrombosis for coupled venous anastomoses of 0.6 percent. One thrombosis occurred in each year of the retrospective collection period, showing that there was no learning curve to the coupler application process that could have predisposed the anastomosis to thrombosis. Of these six venous thromboses, four were muscle-sparing free TRAM flaps, one was a DIEP flap, and one was an IGAP flap. The first venous thrombosis was intraoperative and the anastomosis was taken down, the thrombus in the vessel was flushed out with heparinized saline, and the anastomosis was redone with a smaller coupler. There were no other thrombotic complications in this patient, and the flap survived completely. The second thrombosis occurred on postoperative day 1, was redone with the same size coupler, and then urokinase was infused through the flap with total flap survival. The third thrombosis occurred on postoperative day 6, was not taken back to the operating room, and resulted in partial flap necrosis. The fourth thrombosis occurred on postoperative day 4, a segment of vein was resected in the operating room, a vein graft was used to bridge the gap (coupled on both ends), and urokinase was infused through the flap. There was complete survival of this flap. The fifth thrombosis occurred late on postoperative day 10, was not taken back to the operating room, and resulted in partial flap necrosis. The sixth thrombosis occurred on postoperative day 1, the revised anastomosis was hand-sewn, and urokinase was infused, with complete flap survival. The details of the six venous thromboses are listed in Table 4. There were no total flap losses in this series due to venous thrombosis, although two patients did have partial flap loss as described above.

Statistical analysis showed that the comparison between the proportion of TRAM patients with thrombosis and the proportion of non-TRAM patients with thrombosis was not significant ($p = 0.71$). If one compares the TRAM flap with the DIEP flap, there is no significant difference ($p = 0.66$; the proportion of TRAM patients with thrombosis is not significantly different from the proportion of DIEP patients with thrombosis). If one compares the TRAM flap with IGAP flap, there is a significant difference ($p = 0.04$). If one compares the DIEP flap with the IGAP flap, there is also a significant difference ($p = 0.03$). It is important to keep in mind, however, that the significant results may be due to random sampling error. With such small numbers for the IGAP flaps, it is possible that the one case of IGAP with thrombosis of the five inferior gluteal cases was random and that one could sample a large number of patients and not see another inferior gluteal case with thrombosis.

DISCUSSION

The incidence of intraoperative and postoperative thrombosis with traditional sutured microvascular anastomoses has been quoted as high as 10 percent.[1–4] The rate of thrombosis in breast reconstruction is usually on the lower end of this spectrum, with a mean in the 3 percent range and most being venous thromboses.[1,2] The coupler has been routinely and successfully used by a number of surgeons for venous anastomosis in breast, head and neck, and extremity reconstruction, with venous thrombosis ranging from 0 to 3 percent.[5–15,19] The largest previous clinical experience with the

Table 4. List of Coupled Venous Thromboses

Thrombosis No.	Postoperative Day	Flap Type	Comment
1	0	Muscle-sparing free TRAM	Intraoperative thrombosis, redone with smaller coupler, complete flap survival
2	1	Muscle-sparing free TRAM	Redone with same size coupler, complete flap survival
3	6	DIEP	Not redone—partial flap necrosis
4	4	IGAP	Vein graft used and coupled, complete flap survival
5	10	Muscle-sparing free TRAM	Not redone—partial flap necrosis
6	1	Muscle-sparing free TRAM	Revised anastomosis hand-sewn, complete flap survival

TRAM, transverse rectus abdominis myocutaneous; DIEP, deep inferior epigastric perforator; IGAP, inferior gluteal artery perforator.

Copyright © American Society of Plastic Surgeons. Unauthorized reproduction of this article is prohibited.

coupler showed a venous thrombosis rate of 1.4 percent in 139 anastomoses in 139 free flaps.[19] Our study in 1000 consecutive anastomoses now represents the largest clinical series, yielding a low thrombosis rate of 0.6 percent. This compares favorably with the best results reported for hand-sewn venous anastomoses, which was published as 2.8 percent (1.4 percent intraoperative and 1.4 percent postoperative) in a previous study from our group on 500 free TRAM operations.[15]

Many of the potential or theoretical etiologies for thrombosis are minimized with use of the coupler: foreign body suture contacting blood flow, subendothelial collagen exposure from imperfect intima-to-intima contact, and luminal narrowing (the coupler stents the vessel open at the anastomotic site). Basic microsurgical principles still apply in using the coupler: use heparin flush, minimize handling of the vessel wall that could cause intimal damage, evenly distribute the vessel wall on the coupler pins, minimize tension, and avoid twisting or kinking of the pedicle. The venous anastomosis is usually coupled in 3 minutes, compared with the arterial anastomosis, which usually is hand-sewn in about 12 to 20 minutes. Although this may appear as a minimal time savings, the coupler is far easier to perform and is certainly less taxing on the surgeon as compared with performing a hand-sewn venous anastomosis. At present, approximately half of our free flap breast reconstruction patients undergo bilateral immediate reconstruction. This is where the time savings and limited fatigue factor make the coupler the technique of choice. A formal cost analysis was not performed comparing coupled with sutured venous anastomoses, so it is unknown whether there are overall savings when using the coupler.

The two academic centers that contributed to this clinical series have well-established training programs for both plastic surgery residents and reconstructive microsurgery fellows. We have been criticized by some that by using this faster, more effective technique, we are somehow taking away from resident and fellow education with respect to hand-sewn anastomoses. This same argument has been made many times in the past with the introduction of new surgical technologies. Laparoscopic versus open cholescystectomy, the introduction of minimally invasive techniques, and robotic surgery have all been similarly criticized. The coupler technique will likely continue to grow in terms of acceptance and usage, and hence, all surgical educators in this field will have a responsibility to teach this technique to their residents and fellows.

It should be noted that arterial anastomoses are not routinely performed with the anastomotic coupler at our institution. Like others, we have only used the coupler for the arterial anastomosis when the thoracodorsal vessels have been used as the recipient vessels to the flap. The native structure to the artery makes using the coupler device more challenging. The thicker and less distensible arterial walls do not allow for easy placement of the arterial wall onto the coupler pins. A coupler size smaller than the diameter of the artery must be used to overcome these inherent difficulties. Even when using a smaller coupler, intimal tearing and fragmentation have been common. Using a smaller coupler for arterial anastomoses would potentially reduce functional blood flow and could lead to thrombosis. We have used the coupler for the arterial anastomosis on five flaps, with a postoperative thrombosis occurring several hours after surgery in the fifth flap. This was successfully salvaged with repeated hand-sewn anastomosis. In a series by Ahn et al.,[14] there were five intraoperative thromboses of 29 total arterial thromboses early in their series. This was attributed to the same technical difficulties we have mentioned above.[14] Other studies have reported on its successful use for arterial anastomoses in breast and head and neck reconstruction, both with good patency rates.[16,17] Because of the variable patency rates observed by us and others, we have discontinued our use of the coupler for the arterial anastomosis.

We believe this study is an accurate reflection of what other microsurgeons should expect with the use of the coupler for the venous anastomosis in free flap surgery. All four of the participating surgeons are experienced microsurgeons, and this contributed to no observed learning curve with the introduction of this technique. We, almost always, secure the donor vein first as compared with the recipient vein. The length of the donor vein and the ability to position the flap allow for a greater degree in freedom with positioning the donor vein. The recipient vein is usually less mobile. The donor vein is secured first and then the device is moved to the more restricted recipient vein. Because of the greater freedom of the donor vein, there are no issues of tension on the donor vein or flap during this process. If this process was done in reverse, there is the potential for unrecognized tension on the more limited recipient vein while trying to secure the donor vein. The compact size of the coupler makes it useful for anastomoses performed in tight or deep surgical

Copyright © American Society of Plastic Surgeons. Unauthorized reproduction of this article is prohibited.

spaces (e.g., the axilla when anastomosing to the thoracodorsal vessels). Immediately after completion of the coupling process, forceps are used to reinforce the engagement of the two rings. This is an important step, as there have been sporadic anecdotal reports of coupler separation in the postoperative period, whereby the pins disengage and the anastomosed vessel ends separate. Although there are a range of coupler sizes available, we have routinely used the 3-mm- and 2.5-mm-diameter devices for the great majority of our free flap breast reconstructions.

Although all of the anastomoses in our series of breast reconstructions were performed in an end-to-end manner, there have been reports of successful use of the coupler in end-to-side venous anastomoses in head and neck reconstruction.[18] We have successfully used the coupler in end-to-side fashion for both head and neck and lower extremity reconstruction. Our experience is too limited to add to this particular patient population, but we have had the same excellent results in these other groups of patients. We would expect end-to-side use, as well as the general use of this device in all forms of free flap surgery, to mimic the results achieved in this study. In addition, although significant venous size discrepancies are rare in autologous breast reconstruction, they occasionally occur, particularly with the SGAP and IGAP flaps. Hand-sewn anastomoses between vessels with significant size mismatch can result in pleating of the larger vessel wall around the perimeter of the smaller vessel with incomplete intimal contact. These significant size mismatches have been considered to have a greater risk of postoperative thrombosis. Because of the secure intima-to-intima contact with the coupler technique, the technical problem of significant caliber mismatch is generally overcome. An example of this can be seen in Figure 5, in which an inferior gluteal vein has been coupled to the internal mammary vein with obvious significant vessel size discrepancy.

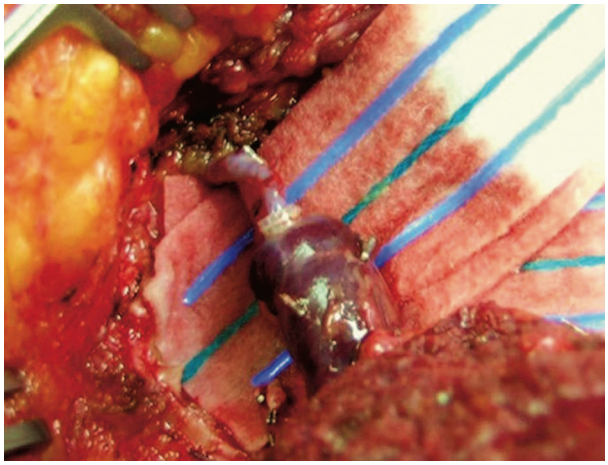

Fig. 5. Inferior gluteal vein coupled to the internal mammary vein with obvious significant vessel size discrepancy.

CONCLUSIONS

When performed carefully by a trained microvascular surgeon, the microvascular anastomotic coupler is an effective, reliable, and fast method for microvascular venous anastomoses. The compact size of the coupler facilitates its use in tight or deep surgical spaces. The availability of multiple coupler sizes allows its use for almost all venous microanastomoses, even when there is significant size discrepancy. Most venous anastomoses can be performed in 3 minutes, which minimizes overall surgical time. Finally, the patency rates for venous anastomoses performed with the microvascular coupler are excellent when compared with standard suture techniques.

Shareef Jandali, M.D.
Division of Plastic Surgery
University of Pennsylvania Health System
3400 Spruce Street
10 Penn Tower
Philadelphia, Pa. 19104
shareef.jandali@uphs.upenn.edu

REFERENCES

1. Kroll SS, Schusterman MA, Reece GP, et al. Timing of pedicle thrombosis and flap loss after free-tissue transfer. *Plast Reconstr Surg.* 1996;98:1230.
2. Kroll SS, Schusterman MA, Reece GP, et al. Choice of flap and incidence of free flap success. *Plast Reconstr Surg.* 1996; 98:459.
3. Nahabedian MY, Momen B, Manson PN. Factors associated with anastomotic failure after microvascular reconstruction of the breast. *Plast Reconstr Surg.* 2004;114:74.
4. Serletti JM, Moran SL, Orlando GS, O'Connnor T, Herrera HR. Urokinase protocol for free-flap salvage following prolonged venous thrombosis. *Plast Reconstr Surg.* 1998;102:1947.
5. Shindo ML, Costantino PD, Nalbone VP, Rice DH, Sinha UK. Use of a mechanical microvascular anastomotic device in head and neck free tissue transfer. *Arch Otolaryngol Head Neck Surg.* 1996;122:529.
6. Rosenthal E, Carroll W, Dobbs M, Scott Magnuson J, Wax M, Peters G. Simplifying head and neck microvascular reconstruction. *Head Neck* 2004;26:930.
7. DeLacure MD, Wong RS, Markowitz BL, et al. Clinical experience with a microvascular anastomotic device in head and neck reconstruction. *Am J Surg.* 1995;170:521.
8. Nishimoto S, Hikasa H, Ichino N, Kurita T, Yoshino K. Venous anastomoses with a microvascular anastomotic device in head and neck reconstruction. *J Reconstr Microsurg.* 2000;16:553.

Copyright © American Society of Plastic Surgeons. Unauthorized reproduction of this article is prohibited.

9. De Bruijn HP, Marck KW. Coupling the venous anastomosis: Safe and simple. *Microsurgery* 1996;17:414.
10. Lanzetta M. Use of the 3M precise microvascular anastomotic system in hand surgery. *J Hand Surg (Am.)* 1995;20:725.
11. Berggren A, Ostrup LT, Ragnarsson R. Clinical experience with the Unilink/3M precise microvascular anastomotic device. *Scand J Plast Reconstr Hand Surg.* 1993;27:35.
12. Sasson HN, Stofman GM, Berman P. Clinical use of the 3M 2.5 mm mechanical microcoupling device in free tissue transfer. *Microsurgery* 1994;15:421.
13. Denk MJ, Longaker MT, Basner AL, Glat PM, Karp NS, Kasabian AK. Microsurgical reconstruction of the lower extremity using the 3M microvascular coupling device in venous anastomoses. *Ann Plast Surg.* 1995;35:601.
14. Ahn CY, Shaw WW, Berns S, Markowitz BL. Clinical experience with the 3M microvascular coupling anastomotic device in 100 free-tissue transfers. *Plast Reconstr Surg.* 1994;93:1481.
15. Vega S, Smartt JM Jr, Jiang S, et al. 500 Consecutive patients with free TRAM flap breast reconstruction: A single surgeon's experience. *Plast Reconstr Surg.* 2008;122:329.
16. Spector JA, Draper LB, Levine JP, Ahn CY. Routine use of microvascular anastomotic coupling device for arterial anastomosis in breast reconstruction. *Ann Plast Surg.* 2006;56:365.
17. Ross DA, Chow JY, Shin J, et al. Arterial coupling for microvascular free tissue transfer in head and neck reconstruction. *Arch Otolaryngol Head Neck Surg.* 2005;131:891.
18. DeLacure MD, Kuriakose MA, Spies AL. Clinical experience in end-to-side venous anastomoses with a microvascular anastomotic coupling device in head and neck reconstruction. *Arch Otolaryngol Head Neck Surg.* 1999;125:869.
19. Yap LH, Constantinides J, Butler CE. Venous thrombosis in coupled versus sutured microvascular anastomoses. *Ann Plast Surg.* 2006;57:666.

enkwell™

www.editorialmanager.com/prs

Submit your manuscript today through PRS' Enkwell. The Enkwell submission and review Web site helps make the submission process easier, more efficient, and less expensive for authors, and makes the review process quicker, more accessible, and less expensive for reviewers. If you are a first-time user, be sure to register on the system.

Copyright © American Society of Plastic Surgeons. Unauthorized reproduction of this article is prohibited.

Management of Significant Venous Discrepancy with Microvascular Venous Coupler

Scott K. Sullivan, M.D., FACS,[1] Frank Dellacroce, M.D.,[1] and Robert Allen, M.D., FACS[1]

ABSTRACT

Microsurgery has revolutionized the art of reconstruction, with the discovery of the ability to replace like tissue with like tissue transferred from a distant site. The evolution of the tissue transferred has also progressed. No longer are free flaps based off a dominant anatomically named vessel, but one of its later derivatives, the perforator. Perforator breast reconstruction dominates the authors' practice, and a frequently encountered problem is mismatched vessels. This situation typically requires more time and concentration for successful completion. Venous mismatches tend to be harder to overcome than arterial; the venous hand-sewn end-to-end anastomoses result in bunching of the larger vessel around the perimeter of the smaller. In this low flow system, these anastomotic imperfections can frequently result in anastomotic failure. Many other techniques have also been described in hopes of improving the anastomotic success. These are often timely or lack improvement in patency rates. The authors have found the MCA microvascular venous coupler to be a reliable method to overcome this problem. The end-to-end technique of microvascular coupling allows a perfect intima-to-intima anastomosis despite the variation in caliber of the vessels. The time to complete the end-to-end anastomoses is significantly reduced to only a matter of minutes.

KEYWORDS: Perforator breast reconstruction, microvascular venous coupling, venous discrepancy, gluteal artery perforator flap

Microsurgical reconstruction is a technically challenging endeavor. The success of the procedure depends on uncomplicated preservation of the revascularization of tissue. Microsurgical reconstructions of the head and neck, as well as of the lower extremity, have well-documented descriptions of the vessel mismatches often encountered.[1,2] These mismatches are a challenge to overcome technically, with no clear consensus about the solution to the problem.

In microsurgical breast reconstruction, specifically perforator flap reconstruction, we also have encountered this dilemma. This most commonly occurs with the use of gluteal artery perforator (GAP)[3] flaps, and occasionally with superficial inferior epigastric artery (SIEA) flaps. The recipient vessels in all cases were the internal mammary. To quickly and easily overcome the mismatches, the MCA microvascular venous coupler was used to perform the venous anastomoses.

PATIENTS AND METHODS

Thirty-eight GAP flaps were used for breast reconstruction from October, 2001 through July, 2002. Twenty (53 percent) were delayed reconstructions and 18 (47 per-

Journal of Reconstructive Microsurgery, Volume 19, Number 6, 2003; accepted for publication February 15, 2003. Address for correspondence and reprint requests: Scott K. Sullivan, M.D., FACS, Section of Plastic Surgery, Louisiana State University Health Sciences Center, 4429 Clara Street, Suite 440, New Orleans, LA 70115. [1]Section of Plastic Surgery, Louisiana State University Health Sciences Center, New Orleans, Louisiana. Copyright © 2003 by Thieme Medical Publishers, Inc., 333 Seventh Avenue, New York, NY, USA. Tel: +1 (212) 584-4662. 0743-684X,p;2003,19,06,377,380,ftx,en;jrm00943x.

cent) immediate. Six (30 percent) of the delayed reconstructions were for implant failure, one (5 percent) for a failed TRAM, with the remainder being post-mastectomy reconstructions. All reconstructions except two were for the treatment of breast cancer. The two outstanding were primary and secondary (implant failure) reconstructions for Poland syndrome. Forty-nine venous anastomoses were performed in the 38 reconstructions. Twenty-seven (71 percent) reconstructions had critical anastomoses.

The GAP flap veins ranged in size from 2.5 to 7.0 mm in diameter. The internal mammary vessels were used as recipients in all but three cases. The internal mammary veins ranged in size from 1.5 to 3.5 mm. They were exposed by resection of the third or fourth costochondral cartilage. The outstanding donor vessels were the second and third intercostal perforators, both preserved by the general surgeon at the time of mastectomy. The average GAP flap vein was 4.0 mm, and the average internal mammary vein was 2.0 mm.

All reconstructions were performed by a team of two microsurgeons. The MCA microvascular coupler was used for all anastomoses. The coupler size was equivalent to the recipient vein diameter, because this was always the smaller vessel. The average anastomotic time was 3.5 min.

Operative Technique Once the free flaps were harvested, they were transferred to the chest and secured. Under microscopic assistance, the flap and recipient vessels were skeletanized in preparation for end-to-end anastomoses. The MCA microvascular sizer was used to measure the lumen diameter while being dilated with jeweler's forceps (Figs. 1, 2). The mechanical dilation of the vessels allowed us to measure maximum luminal dilatation. The selection of coupler size is equivalent to that diameter measured on the smaller vessel.

The initial draping of the flap vein is preferred, because its pedicle length allows easier positioning of the coupler for recipient exposure (Fig. 3). The flap vein is brought through the coupler ring and draped over the pegs followed similarly with the recipient. The MCA microvascular coupler is compressed by turning the applicator handle clockwise. Once coupled, the rings are further compressed with hemostats for good measure. The applicator handle is turned counterclockwise and the coupler rings are ejected (Fig. 4).

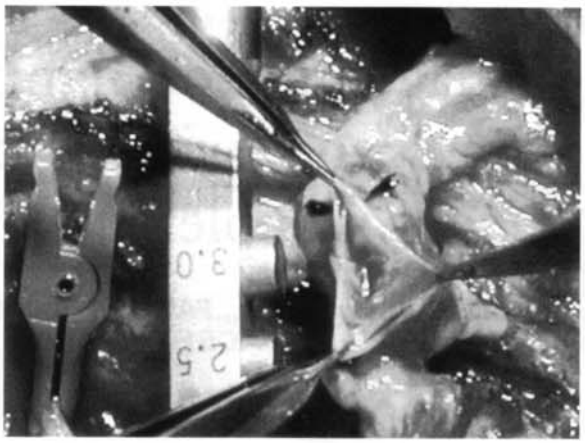

Figure 2 Luminal measurement of the S-GAP vein (7 mm).

RESULTS

Evaluation of an anastomotic technique is best examined in the situations in which there is a critical vein (single venous anastomosis). Twenty-seven of the 38 S-GAP breast reconstructions had a critical venous anastomosis. One (3.5 percent) of the 27 required re-exploration for venous congestion. Intraoperatively, it was discovered that the obstruction was due to a twist in the vein, while the anastomosis remained patent. A correction was made, and the flap was salvaged. Typical vessel discrepancy was 2 to 3 mm (ratio: 2 to 2.5:1), with the greatest differential of 5 mm (ratio: 3.5:1, as shown in Figure 4A).

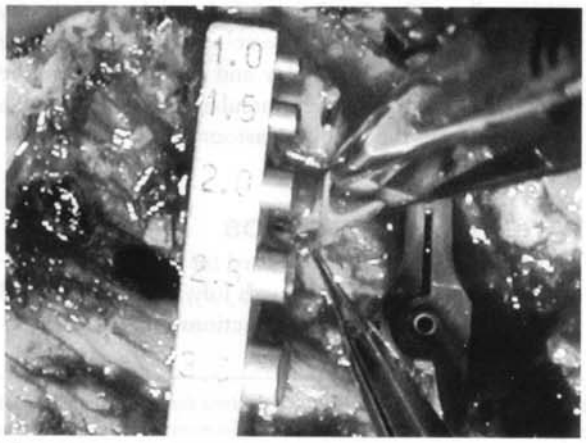

Figure 1 Luminal measurement of the internal mammary vein (2 mm).

Figure 3 A 7-mm S-GAP vein after it has been draped over the pegs of a 2-mm coupler ring.

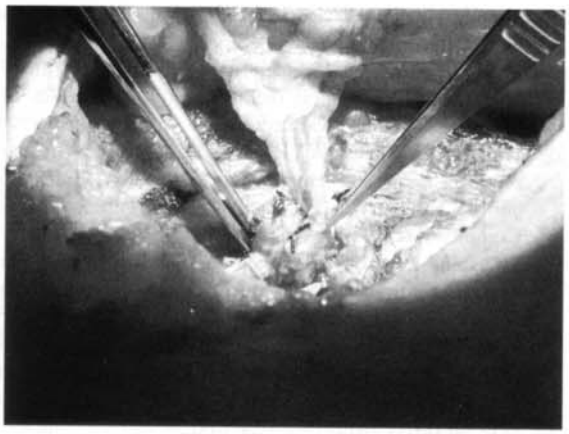

A

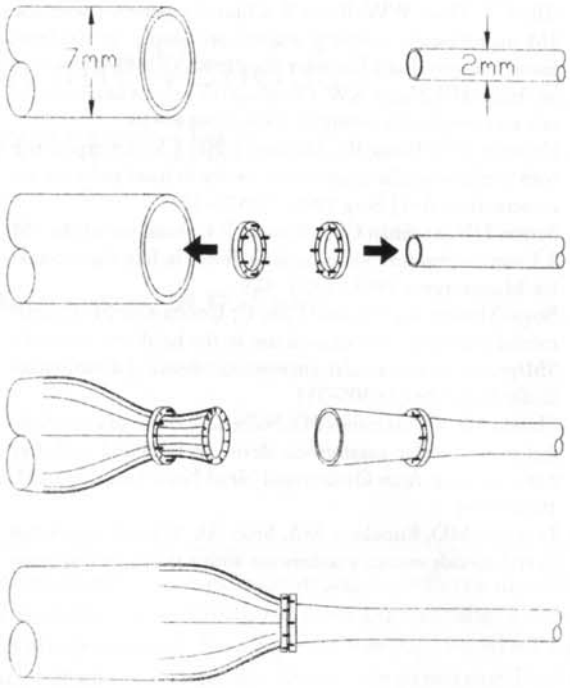

B

Figure 4 (A) Completed coupling of the 7-mm S-GAP vein to the 2-mm internal mammary vein with a 2-mm coupler. (B) Schematic diagram of the coupling procedure.

DISCUSSION

The critical evaluation of microsurgical anastomoses has been an ongoing process since its origin. Perfection of the technique insures a successful outcome. We have found the use of the MCA micovascular coupler to be a tremendous asset in our practice of perforator flap breast reconstruction. The value of its application and effectiveness has been well-documented.[1,2,4–9] Previous articles have describe the device's limitations, mostly regarding its use in vessels of "minimal discrepancy,"[4–6] and have explored its effectiveness in the end-to-side technique for vessels of greater discrepancy.[10]

Alternative methods have also been described in hopes of better overcoming size discrepancy. Mechanical dilatation or spatulation of the end of the smaller vessel has been described to increase vessel diameter.[11,12] A "fish-mouth" incision has also been described to increase vessel diameter, and has been applied in both end-to-end and end-to-side anastomoses.[13] Even extremes such as perioperative vessel dilatation using a percutaneous transluminal angioplasty catheter have been described to overcome significant size discrepancy.[14] Most microsurgeons, when confronted with the problem of significant size discrepancy, will most often choose to perform an end-to-side anastomosis; this has been suggested in experimental studies to have a higher patency rate.[12,15]

Our position is quite contrary to current thinking. We, in fact, believe that the ideal situation for end-to-end venous coupling is not only minimally discrepant vessels, but extremely discrepant vessels. The MCA microvascular coupler performs a perfect intima-to-intima anastomosis, even on these largely discrepant vessels. This alone is a nearly impossible task to complete with hand-sewn techniques. Typical bunching of the larger vessel lumen often causes luminal invagination or constriction of the anastomoses.

The instrumental dilatation of the smaller vessel to obtain coupler size maximizes the caliber of the anastomoses. The larger vessel is neatly draped over the ring and pegs, creating pleats. During compression, we closely watch the perimeter of the larger vessel, to make sure it remains fully draped over the rings, thus avoiding extraluminal debris to contaminate the anastomoses. The ability to visualize the lumen to point of anastomosis is difficult to duplicate in hand-sewn techniques.

Although limited to perforator flap breast reconstruction, similar size discrepancies are often found in head and neck, as well as lower extremity, reconstruction. We have easily overcome discrepancies of 2 to 3.5:1, with 100 percent patency of the 27 critical anastomoses. We note that the re-exploration was caused by poor vessel alignment prior to coupling and not due to an anastomotic failure. All of these anastomoses were also completed in 3 to 5 min, which is difficult to accomplish with any hand-sewn techniques.

REFERENCES

1. Nishimoto S, Hikasa H, Ichino N. Venous anastomosis with a microvascular anastomotic device in head and neck reconstruction. J Reconstr Microsurg 2000;16:553–556
2. Denk MJ, Longaker MT, Basner AL. Microsurgical reconstruction of the lower extremity using the 3M microvascular coupling device in venous anastomoses. Ann Plast Surg 1995;35:601–606
3. Allen RJ. Superior gluteal artery perforator free flap for breast reconstruction. Plast Reconstr Surg 1995;95:1207–1212

4. Ahn CY, Shaw WW, Berns S. Clinical experience with the 3M microvascular coupling anastomotic device in 100 free-tissue transfers. Plast Reconstr Surg 1994;93:1481–1484
5. de Bruijn HP, Marck KW. Coupling the venous anastomosis: safe and simple. Microsurgery 1996;17:414–416
6. Delacure MD, Wong RS, Markowitz BL. Clinical experience with a microvascular anastomotic device in head and neck reconstruction. Am J Surg 1995;170:521–523
7. Sasson HN, Stofman GM, Berman P. Clinical use of the 3M 2.5 mm mechanical microcoupling device in free tissue transfer. Microsurgery 1994;15:421–423
8. Borja-Morant A,, Navarro-Villa C, Cuesta-Gil M. Experimental evaluation and clinical use in the head and neck of a 3M/precise microvascular anastomotic device. J Craniomaxillofac Surg 1995;23:305–311
9. Shindo ML, Constantino PD, Nalbone VP. Use of a mechanical microvascular anastomotic device in head and neck free tissue transfer. Arch Otolaryngol Head Neck Surg 1999;125: 1033–1034
10. Delacure MD, Kuriakose MA, Spies AL. Clinical experience in end-to-side venous anastomoses with a microvascular anastomotic coupling device in head and neck reconstruction. Arch Otolaryngol Head Neck Surg 1999;125:869–872
11. Pho RWH. General principles of microsurgery. In: Pho RWH, ed. Microsurgical Techniques in Orthopaedics. London: Butterworths & Co Ltd; 1988
12. Hidalgo DA, Shaw WW, Romita MC, Godfrey NV. Anastomotic technique and vein grafts. In: Shaw WW, Hidalgo DA, eds. Microsurgery in Trauma. New York: Futura Publishing Company, Inc; 1987
13. Harashina T, Irigaray A. Expansion of smaller vessel diameter by fish-mouth incision in microvascular anastomosis with marked size discrepancy. Plast Reconstr Surg 1980;65:502–503
14. Yuksel E, Safak T, Ozcan G, et al. Perioperative dilation for vessel-size discrepancy using a percutaneous transluminal angioplasty catheter. J Reconstru Microsurg 1999;15:31–35
15. O'Brien BMcC, Morrison WA. End-to-end anastomosis. In: O'Brien BMcC, Morrison WA, eds. Reconstructive Microsurgery. London: Churchill Livingstone; 1987

HNO 2004 · 52:121–124
DOI 10.1007/s00106-003-0895-x
Online publiziert: 4. November 2003
© Springer-Verlag 2003

Redaktion
H.P. Zenner, Tübingen

E. Röpke · A. Berghaus · M. Bloching
Klinik und Poliklinik für Hals-, Nasen- und Ohrenheilkunde, Kopf- und Halschirurgie, Martin-Luther-Universität, Halle-Wittenberg

Ring-Pin-Anastomosentechnik

Klinische Langzeiterfahrungen mit dem mechanischen Ring-Pin-System für mikrovaskuläre Anastomosen in der rekonstruktiven Kopf-Hals-Chirurgie

Die mikrovaskuläre Anastomose stellt einen der kritischsten Aspekte beim freien Gewebetransfer im Rahmen der rekonstruktiven Chirurgie dar. Mikrochirurgische Nahttechniken sind in ihrer Ausführung kompliziert und zeitaufwendig. Lange Ischämiezeiten und das Vorhandensein von Nahtmaterial an der inneren Gefäßoberfläche können neben einer unsachgemäßen Nahttechnik die Ursache für postoperative Thrombosen darstellen. Deswegen wurde nach alternativen mikrovaskulären Anastomosetechniken gesucht, welche schneller, einfacher und sicherer als traditionelle Nahtmethoden in der Mikrochirurgie einsetzbar sind.

Experimentelle Studien verfolgten dabei 2 Richtungen: einerseits chemische und physikalische Methoden wie die Benutzung von Fibrinkleber oder die Nutzung von Lasertechniken, und andererseits verschiedene mechanische Anastomosetechniken. Aus der Gruppe der chemischen und physikalischen Methoden konnte sich für den klinischen Gebrauch keine Technik durchsetzen. Bei der Entwicklung von mechanischen Anastomosegeräten wurden 3 Grundprinzipien entwickelt: Cuff-Techniken, Klipps, Stapler und Ring-Pin-Systeme [1, 2, 3, 4].

In der klinischen Praxis hat sich v. a. das Ring-Pin-Prinzip durchgesetzt. Erstmalig wurde dieses Prinzip von Payr 1904 [22] vorgestellt. 1962 entwickelte Nakayama [5] ein Ring-Pin-Gerät, mit dem über 2 mit Nadeln und Öffnungen versehenen Ringen Gefäßenden exakt adaptiert werden konnte. Dieses Prinzip wurde von Oestrup und Berggren 1979 [6] für den mikrochirurgischen Gebrauch weiterentwickelt. Nach umfangreichen experimentellen Studien können heute 4 verschiedene Ringgrößen mit Innendurchmesser von 1,0; 1,5; 2,0 und 2,5 mm zur klinischen Benutzung in der Mikrochirurgie benutzt werden. Geeignet sind Gefäße mit einem Außendurchmesser von 0,8 bis 3,0 mm.

Patienten und Methode

Das GEM®-Mikrovaskuläre-Anastomose-System (MAS) besteht aus einem wiederverwendbaren, handlichen Anastomoseinstrument, einem wiederverwendbaren Maß zur Bestimmung des Gefäßdurchmessers (**Abb. 1**) und den Ring-Pin-Systemen in 4 verschiedenen Größen. In die Halterung des Anastomoseinstruments können die Ring-Pin-Systeme auf einfache Weise integriert werden (**Abb. 2**). Die 2 Ringe eines Ring-Pin-Systems bestehen aus Polyethylen mit jeweils 6 Nadeln (Pins) aus rostfreiem Stahl und alternierenden Löchern. In **Abb. 3**a,b,c wird das Vorgehen bei einer venösen End-zu-End-Anastomose gezeigt.

In unserer Klinik wird das MAS zur venösen End-zu-End-Anastomose beim freien Gewebetransfer in der Kopf-Hals-Tumorchirurgie seit 1996 benutzt. In die Studie eingeschlossen wurden 48 Patienten, bei denen wir von Januar 1996 bis Oktober 2001 Defektrekonstruktionen mit mikrovaskulär anastomosierten Unterarmlappen durchführten. Der Gefäßstiel des Lappens wurde zur Vermeidung von Kompressionen oder einem Kinking mit umgebendem Fettgewebe gehoben. Als venöses Drainagegefäß verwendeten wir

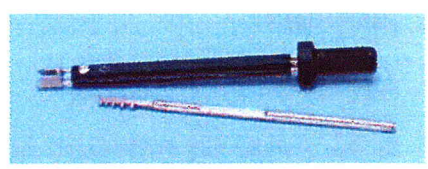

Abb. 1 ▲ **MAS-System mit Anastomoseinstrument (*oben*) und Gefäßgrößenmesser (*unten*)**

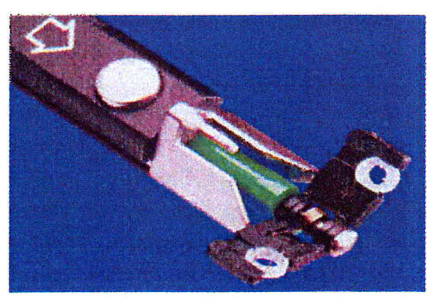

Abb. 2 ▲ **Anastomoseinstrument mit installiertem Ring-Pin-System der Größe 2,0 mm**

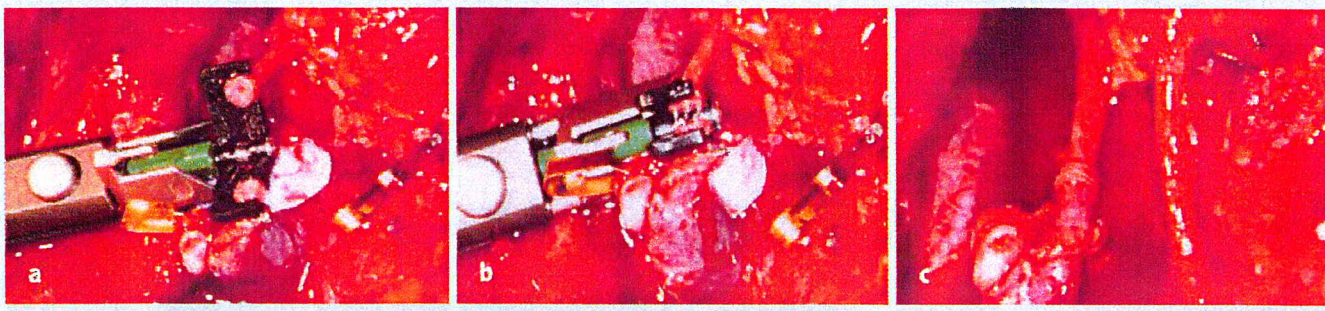

Abb. 3 ▲ **Vorgehen bei einer venösen End-zu-End-Anastomose.** a **Die zu anastomosierenden Venen werden in üblicher Weise wie vor einer mikrovaskulären Naht präpariert. Wichtig ist die exakte Messung der Gefäßdurchmesser mit dem Gefäßgrößenmesser und die Wahl der geeigneten Ringgröße. Ein Gefäßende wird durch einen der 2 Ringe hindurch gezogen, die Gefäßwand wird um 90° evertiert und über die Stahlnadeln gezogen. Dabei ist zu beachten, dass die Spannung gleichmäßig um den Kreisumfang verteilt wird und die Intimaschicht von jeder Nadel gefasst wird. Das gleiche Vorgehen erfolgt mit dem anderen Venenende und dem korrespondierenden Ring.** b **Die beiden Ringe werden schließlich mechanisch zusammengefügt, indem das drehbare Ende des Anastomoseinstrumentes nach rechts gedreht wird. Dabei versenken sich die Stahlnadeln beider Ringe in die korrespondierenden Löcher und die Anastomose wird durch Reibungskräfte gesichert.** c **Abschließend werden die Ringe vom System freigegeben. Die Anastomosierung ist beendet**

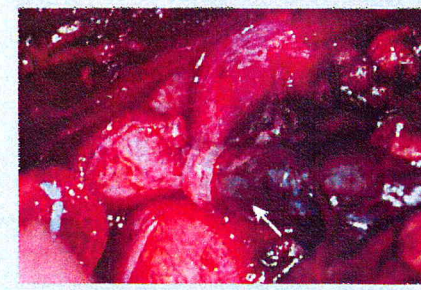

Abb. 4 ▲ **Venöse Stauung (*Pfeil*) nach Anastomosierung mit dem MAS-System durch Wahl zu kleiner Ringe**

die V. cephalica. Die venöse Anastomose erfolgte mit der V. facialis oder mit der V. jugularis externa. Die arterielle Anastomose wurde zwischen der A. radialis und der A. thyroidea superior, in Einzelfällen auch der A. facialis durchgeführt.

Bei 20 Patienten verwendeten wir das Ring-Pin-System zur venösen Anastomose in End-zu-End-Technik. Die klinischen Ergebnisse wurden mit den anderen 28 Patienten verglichen, bei denen die Anastomosierung der Vene mit 9-0-Prolene-Naht erfolgte.

Ergebnisse

In der Gruppe mit MAS-Anastomose (n=20) zeigten 2 Transplantate eine venöse Stauung innerhalb der ersten 24 h postoperativ (◘ **Abb. 4**). Nach operativer Revision war das Transplantat gut durchblutet, und der weitere postoperative Verlauf gestaltete sich unauffällig. Grund der venösen Stauung war ein zu klein gewählter Ring. Eine Thrombosierung kam nicht vor. In der anderen Gruppe mit genähten Gefäßanastomosen (n=28) wurde ein Gewebelappen durch eine venöse Thrombosierung ischämisch und musste teilweise entfernt werden. Die Anastomosezeit konnte durch Verwendung des Ring-Pin-Systems deutlich verkürzt werden. Bei Anastomosierung der Venen mit dem MAS-System wurden 3–6 min benötigt, während die mikrochirurgische Naht durchschnittlich 15 min in Anspruch nahm.

Alle Patienten wurden nach der Entlassung regelmäßig in der onkologischen Sprechstunde nachbetreut. Die Langzeitergebnisse mit dem MAS-System zeigten bis zu 5 Jahre postoperativ keine pathologischen Gewebereaktionen oder Minderdurchblutung des Transplantates. Insbesondere wurde bei keinem Patienten eine spätere Thrombosierung beobachtet.

Diskussion

In umfangreichen experimentellen Tierversuchen und in der klinischen Anwendung konnte das MAS-System seine Effektivität beweisen. Histologische Untersuchungen von mechanischen Anastomosen mit dem MAS-System zeigten einen mikrovaskulären Heilungsverlauf vergleichbar mit dem von genähten Gefäßen [7, 8]. In Tierversuchen wurde nachgewiesen, dass die mechanisch gekoppelten Anastomosen einen gleichen oder besseren Durchfluss hatten als genähte Anastomosen [9, 10, 11]. Durch Benutzung des Rin-Pin-Systems konnte die Anastomosierung deutlich schneller durchgeführt werden, und das sowohl bei normalen als auch bei bestrahlten Gefäßen [12, 13, 14]. Damit konnte die Ischämiezeit deutlich verkürzt werden. Studien zur Stabilität der Anastomose zeigten, dass die mechanisch gekoppelten Anastomosen bei Zugbelastung 50% fester als die Nahtanastomosen sind [8].

Auch die bisher in einigen anderen Zentren gesammelten Erfahrungen am Patienten bestätigten die schnelle und sichere mikrochirurgische Anastomosierung mit dem Ring-Pin-System [15, 16, 17]. Untersuchungen in einem Magnetresonanztomographen zeigten keine Deplatzierung der Ringe [18].

Nach einer relativ kurzen Übungsphase ist es dem Operateur möglich, die Ring-Pin-Anastomose problemlos und in einer deutlich kürzeren Zeit als Nahtanastomosen durchzuführen. Durchschnittlich wird für die mechanische Anastomose mit dem MAS-System eine Zeit von 3–6 min benötigt. Im Gegensatz dazu muss für die mikrovaskuläre Naht eine 2- bis 3-mal längere Zeit eingeplant werden. Wichtig für die erfolgreiche Anastomosierung mit dem MAS-System ist die Wahl der richtigen Ringgröße in Abhängigkeit vom Durch-

messer der zu anastomosierenden Gefäße. Durch die Benutzung zu großer Ringe wird die Gefäßwand zu stark belastet und kann dadurch einreißen. Ein zu klein gewählter Ring kann andererseits, wie in unseren Fällen, eine venöse Stauung zur Folge haben (◘ Abb. 4).

Unsere Erfahrungen bestätigen, dass die venöse End-zu-End-Anastomosierung mit dem MAS-System relativ einfach, schnell und sicher durchzuführen ist. Langzeitergebnisse zeigten eine gute Gewebeverträglichkeit sowie eine gute Durchblutung der Transplantate. Die Anwendung zur mikrochirurgischen Anastomosierung von Arterien stellte sich jedoch als schwierig dar, weil die arterielle Gefäßwand häufig zu dick oder arteriosklerotisch verändert ist und damit die Applikation der Ring-Pin-Systeme unmöglich wird. End-zu-Seit-Anastomosen zur V. jugularis interna werden in der Literatur als durchführbar beschrieben [19, 20], sind aber aus unserer Sicht komplizierter als die End-zu-End-Anastomose und in den meisten Fällen nicht erforderlich. Als besonders vorteilhaft erwies sich die Anwendung des MAS-Systems bei der Anastomosierung von venösen Interponaten zur Verlängerung von Gefäßen, weil dadurch die Anastomosezeit erheblich verkürzt werden kann.

Derzeitige Forschungen beschäftigen sich mit der Erprobung biologisch abbaubarer Ring-Pin-Systeme [21].

Die Produkte des MAS-Systems haben zzt. noch nicht das CE-Zeichen, mit welchem Medizinprodukte in den Ländern der EU seit dem 14.06.1998 versehen sein müssen. Der Hersteller in den USA wurde bereits aufgefordert, das Zulassungsverfahren einzuleiten; bestehende Lagerbestände bei Händlern und in Kliniken können jedoch bedenkenlos weiterverwendet werden (§ 48 des Medizinproduktegesetz).

Ein Kostenvergleich zeigt, dass die Ring-Pin-Systeme derzeit deutlich teurer als das gebräuchliche Nahtmaterial sind. Ein Ring-Pin-System kostet gegenwärtig etwa 195,14 EUR, hingegen ein 9-0-Prolene-Faden nur etwa 9,27 EUR.

Aus unserer Sicht stellt das MAS-System eine sichere Möglichkeit der venösen Anastomosierung dar, die besonders beim Einsatz von Gefäßinterponaten Vorteile hat.

Zusammenfassung · Abstract

HNO 2004 · 52:121–124
DOI 10.1007/s00106-003-0895-x
© Springer-Verlag 2003

E. Röpke · A. Berghaus · M. Bloching

Ring-Pin-Anastomosentechnik. Klinische Langzeiterfahrungen mit dem mechanischen Ring-Pin-System für mikrovaskuläre Anastomosen in der rekonstruktiven Kopf-Hals-Chirurgie

Zusammenfassung

Hintergrund. Mikrovaskuläre Anastomosen stellen einen der kritischsten Aspekte beim freien Gewebetransfer dar. Weil mikrochirurgische Nahttechniken kompliziert und zeitaufwendig sind, wurde nach anderen Anastomosetechniken gesucht. Eine solche Methode ist das Ring-Pin-System.

Methode. Von Januar 1996 bis Oktober 2001 wurden bei 48 Patienten Defektrekonstruktionen mit gestielten, mikrovaskulär anastomosierten Unterarmlappen vorgenommen. Bei 20 Patienten wurde die venöse Anastomose mit dem Ring-Pin-System in End-zu-End-Technik durchgeführt. Die klinischen Ergebnisse wurden mit 28 Patienten verglichen, bei denen die Anastomosierung der Vene mit 9-0-Prolene-Naht in End-zu-End-Technik erfolgte.

Ergebnisse. In der Gruppe mit Ring-Pin-Anastomose (n=20) zeigten 2 Gewebelappen eine venöse Stauung innerhalb der ersten 24 postoperativen Stunden. Nach der Revision waren die Transplantate gut durchblutet. In der Gruppe mit genähten Gefäßanastomosen (n=28) wurde ein Gewebelappen durch eine venöse Thrombosierung ischämisch und musste teilweise entfernt werden. Die Anastomosezeit konnte durch Verwendung des Ring-Pin-Systems deutlich verkürzt werden.

Schlussfolgerungen. Die venöse End-zu-End-Anastomosierung mit dem Ring-Pin-System ist nach einer relativ kurzen Übungsphase vergleichsweise einfach und schnell durchzuführen. Langzeitergebnisse zeigten eine gute Gewebeverträglichkeit des Materials sowie eine gute Durchblutung der Transplantate.

Schlüsselwörter

Mikrochirurgie · Mikrovaskuläre Anastomosen · Ring-Pin-System

Ring-pin anastomosis. Long-term clinical experience with the mechanical ring-pin system for microvascular anastomosis in reconstructive head and neck surgery

Abstract

Background. Microvascular anastomosis remains one of the most critical aspects of free tissue transfer. Since microsurgical suture techniques are complicated and time-consuming, other techniques of anastomosis have been created. One of these is the ring-pin system.

Methods. Between January 1996 and October 2001, 48 patients underwent reconstruction with a free radial forearm flap. In 20 patients the venous anastomosis was carried out using a ring-pin system with end-to-end technique. The clinical results were compared to the other 28 patients in whom the anastomosis was sutured with 9-0 prolene.

Results. In the group using ring-pin anastomosis (*n*=20), two flaps showed venous congestion within 24 h postoperatively. After revision the flaps were well perfused. In the other group with sutured vessels (*n*=28), a transplant became ischemic in one patient due to venous thrombosis and had to be partly removed. The time of anastomosis was considerably shortened by the use of the ring-pin system.

Conclusions. The venous end-to-end-anastomosis using the ring-pin system can be carried out relatively easily and rapidly after a comparatively short period of training. Long-term results have shown good tissue tolerance of the material and sufficient blood circulation of the grafts.

Keywords

Microsurgery · Microvascular anastomosis · Ring-pin system

Fazit für die Praxis

Die venöse End-zu-End-Anastomosierung mit dem Ring-Pin-System ist nach einer relativ kurzen Übungsphase vergleichsweise einfach und in einer deutlich kürzeren Zeit als Nahtanastomosen durchzuführen. Besonders vorteilhaft ist die Anwendung des MAS-Systems bei Anastomosierung von venösen Interponaten zur Verlängerung von Gefäßen.

Korrespondierender Autor

Priv.-Doz. Dr. med. M. Bloching

Klinik und Poliklinik für Hals-, Nasen- und Ohrenheilkunde, Kopf- und Halschirurgie, Martin-Luther-Universität Halle-Wittenberg, Magdeburgerstraße 12, 06097 Halle (Saale)

Literatur

1. Boeckx WD, Darius O, van den Hof B, van Holder C (1997) Scanning electron microscopic analysis of the stapled microvascular anastomosis in the rabbit. Ann Thorac Surg 63: 128–134
2. Colemann DJ, Timmons MJ (1989) Non-suture external cuff techniques for microvascular anastomosis. Br J Plast Surg 42: 550–555
3. Deshmukh GR, Yang Y, Tellis VA, Gerst PH (1992) A simple cuff-suture technique for microvascular anastomosis. J Reconstr Microsurg 8: 491–494
4. Kirsch WM, Zhu YH, Hardesty RA, Chapolini R (1992) A new method for microvascular anastomosis: Report of experimental and clinical research. Am Surg 58: 722–727
5. Nakayama K, Tamiya T, Yamamoto K, Akimoto S (1962) A simpel new apparatus for small vessel anastomosis (free autograft of the sismoid included). Surgery 52: 918–931
6. Östrup LT, Berggren A (1986) The Unilink instrument system for fast and safe microvascular anastomosis. Ann Plast Surg 17: 521–525
7. Blair WF, Morecraft RJ, Steyers CM (1989) A microvascular anastomotic device: A histologic study in arteries and veins. Microsurgery 10: 29–39
8. Gilbert RW, Ragnarsson R, Berggren A, Östrup L (1989) The strength of microvascular anastomoses: A comparison between the Unilink anastomotic system and sutures. Microsurgery 10: 40–46
9. Falconer DP, Lewis TW, Lamprecht EG, Mendenhall DVM (1996) Evaluation of a microvascular anastomotic device in the dog. J Reconstr Microsurg 6:215–222
10. Ragnarson R, Berggren A, Östrup LT, Franzen L (1989) Microvascular anastomosis of interpositional vein grafts with the Unilink system. Scand J Plast Reconstr Surg 23: 23–28
11. Ragnarson R, Berggren A, Östrup LT (1992) Long term evaluation of the unilink anastomotic system. Scand J Plast Reconstr Hand Surg 26: 167–171
12. Gilbert RW, Ragnarson R, Berggren A, Östrup L (1989) Microvenous grafts to arterial defects. Arch Otolaryngol Head Neck Surg 115: 970–976
13. Ragnarsson R, Berggren A, Klintenberg C, Östrup L (1990) Microvascular anastomoses in irradiated vessels: A comparison between the Unilink system and sutures. Plast Reconstr Surg 85: 412–418
14. Reinert S, Horn H, Bürrig KF (1994) Microvascular anastomosis of interpositional vein grafts with sutures and a new mechanical device – a histologic and scanning electron microscopic study. Int J Oral Maxillofac Surg 23: 434–436
15. Berggren A, Östrup LT, Ragnarsson R (1993) Clinical experience with the Unilink/3 M Precise microvascular anastomotic device. Scand J Plast Reconstr Surg Hand Surg 27: 35–39
16. Shindo ML, Constantino PD, Nalbone VP, Rice DH, Shina UK (1996) Use of mechanical microvascular anastomotic device in head and neck free tissue transfer. Arch Otolaryngol Head Neck Surg 122: 529–532
17. Wax MK, Winslow CP, Desyatnikova S, Andersen PE, Cohen J (2000) Microvascular anastomotic device and running suture of venous anastomoses: a longitudinal comparison. Presented at: 5th International Conference on Head and Neck Cancer, July 29–August 2, in San Francisco/CA
18. DeLacure MD, Wang HZ (1997) Magnetic resonance imaging assessment of a microvascular anastomotic device for ferromagnetism. J Reconstr Microsurg 13: 571–574
19. Ragnarson R, Berggren A, Östrup LT (1989) Microvenous end-to-side anastomosis: an experimental study comparing the Unilink system and sutures. J Reconstr Microsurg 5/3: 217–224
20. DeLacure MD, Kuriakose A, Spies A (1999) Clinical experience in end-to-side venous anastomoses with a microvascular anastomotic coupling device in head and neck reconstruction. Arch Otolaryngol Head Neck Surg 125/8: 869–872
21. Joji S, Muneshige H, Ikuta Y (1999) Experimental study of mechanical microvascular anastomosis with new biodegradable ring device. Br J Plast Surg 52:559–564
22. Payr E (1904) Zur Frage der zirkulären Vereinigung von Blutgefäßen mit resorbierbaren Prothesen. Arch Chir 72: 32

Gemeinsames Programm von BMBF und DFG für medizinische Forschung in Deutschland

Bundesforschungsministerin Edelgard Bulmahn und der Präsident der Deutschen Forschungsgemeinschaft (DFG), Prof. Winnacker, haben eine gemeinsame Initiative für die patientennahe medizinische Forschung in Deutschland vorgestellt. Damit können in Deutschland nun erstmals klinische Studien unabhängig von ihrer Fragestellung oder von der jeweiligen Krankheit finanziert werden. Das Programm ist in den nächsten vier Jahren mit insgesamt 40 Mio. Euro ausgestattet.

Ziel der Initiative ist es, Ergebnisse der Humangenomforschung durch klinische Studien in die Anwendung zu bringen und für die Weiterentwicklung von Prävention, Diagnose und Therapie zu nutzen. Mit Hilfe dieses Programms können Studien finanziert werden, bei denen kleine Patientengruppen untersucht werden, an denen die Pharmaindustrie keine wirtschaftlichen Interessen hat. Ein Beispiel ist die Behandlung von Hirntumoren mit etwa 3.000 Neuerkrankungen pro Jahr. Durch eine koordinierte Vorgehensweise sollen besonders nachhaltige Effekte erzielt werden.

Mit dem neuen Programm wird der systematische Ausbau der klinischen Forschung durch die Förderung des Bundesministeriums für Bildung und Forschung (BMBF) konsequent weiter geführt. Insgesamt hat das BMBF in den letzten vier Jahren 280 Mio. Euro für die klinische Forschung bereit gestellt. An 12 medizinischen Fakultäten sind seit 1999 „Koordinierungszentren fuer Klinische Studien" aufgebaut worden, die eine Infrastruktur für die Durchführung bereitstellen, aber auch Ärzte schulen und beraten. Ebenfalls seit 1999 sind bislang 17 „Kompetenznetze in der Medizin" gegründet worden, in denen die für ein bestimmtes Krankheitsbild am besten ausgewiesenen Forscher und Ärzte klinische Studien gemeinsam durchführen. Bundesforschungsministerin Bulmahn rechnet damit, dass der Grundstock gelegt ist, auf dem nun gemeinsam mit der DFG klinische Spitzenforschung in Deutschland etabliert werden kann.

Deutsche Forschungsgemeinschaft (DFG)
e-mail: em.streier@dfg.de

Evaluation der Ring-Pin-Anastomosetechnik – kann die mikrovaskuläre Anastomose in konventioneller Nahttechnik ersetzt werden?

G. Nahles[1], M. Klein[2], C. Glatzer[1]

[1]Klinik für Mund-, Kiefer- und Gesichtschirurgie, Klinische Navigation und Robotik, Charité - Universitätsmedizin Berlin, Campus Virchow-Klinikum,
[2]Fachklinik Hornheide, Mund-, Kiefer- und plastische Gesichtschirurgie, Münster

Einleitung

Der freie mikrovaskulär anastomosierte Gewebetransfer ist eine Standardmethode der rekonstruktiven MKG-Chirurgie. Die Gefäßanastomose ist dabei einer der sensibelsten Aspekte. Die mikrochirurgische Nahttechnik ist technisch anspruchsvoll und in der Durchführung zeitintensiv. Lange Op-Zeiten und der damit verbundene ischämische Stress begünstigen ebenso wie unsachgemäße Nahttechniken postoperative Thrombosen und den Transplantatverlust.
Aus diesem Grund wurden seit langem alternative Techniken der Gefäßanastomosierung gesucht. Das Ziel ist dabei ein System, das schneller, einfacher und sicherer als traditionelle Nahttechniken funktioniert. Das hier vorgestellte Ring-Pin-System sollte diese Anforderungen erfüllen.

Material und Methoden

Von November 2007 bis Februar 2009 wurden bei 9 Patienten Defektrekonstruktionen im Mund-, Kiefer- und Gesichtsbereich mit gestielten, mikrovaskulär anastomosierten Lappen (5 Unterarmlappen, 4 Fibulatransplantate mit Hautinsel) vorgenommen. Dabei wurden insgesamt 16 venöse Anastomosen mit dem Ring-Pin-System in End-zu-End Technik und eine venöse Anastomose in End-zu-Seit Technik durchgeführt. Die klinischen Ergebnisse wurden mit 10 Patienten verglichen, bei denen die Venen durch konventionelle Nahttechnik anastomosiert wurden.
(Ring-Pin-System: GEM-Coupler von MCA Synovis, Vertrieb Deutschland www.tapmed.com)

Ergebnisse

In der Ring-Pin-Gruppe zeigte ein Lappen eine venöse Stauung innerhalb der ersten 36 postoperativen Stunden. Bei der Revision zeigte sich die Abknickung einer Vene am Ring-Pin-System bei zu steilem Winkel der Gefäßenden. Nach der Verlagerung der Vene war der Lappen gut durchblutet. Bei einer Ring-Pin-Anastomose musste wegen eines unüberbrückbaren Kaliberspruns von der zunächst geplanten End-zu-End Technik auf eine End-zu-Seit Technik gewechselt werden. Das Transplantat war im Verlauf gut durchblutet.
In der Gruppe mit genähten Anastomosen kam es im Rahmen einer massiven Wundinfektion am 8. postoperativen Tag zu einer Thrombosierung mit Ischämie und Lappenverlust.
Die mittlere Anastomosezeit war in der Ring-Pin-Gruppe deutlich verkürzt (6min vs. 19min).

Diskussion

Nach unserer Kenntnis wird der mikrochirurgischen Anastomose in konventioneller Nahttechnik in den meisten mund-, kiefer- und gesichtschirurgischen Zentren des deutschsprachigen Raumes weiterhin der Vorzug gegeben. Die fehlende Eignung des Ring-Pin-Systems für die dickwandigen arteriellen Gefäße mag ein Grund dafür sein. Indessen belegen experimentelle und klinische Studien die Effizienz und die Sicherheit des Systems für venöse End-zu-End und End-zu-Seit Anastomosen [1,2,3].
Unsere Erfahrungen bestätigen, dass das Ring-Pin-System einfach zu handhaben ist. Nach einer kurzen Einarbeitungszeit können venöse Anastomosen mit erheblich geringerem Zeitaufwand sicher durchgeführt werden. Die Ischämiezeit des Gewebes wird dadurch deutlich verkürzt. Die End-zu-End Anastomose funktioniert nur bei in etwa kalibergleichen Gefäßen. Zur exakten Bestimmung liefert der Hersteller eine Messleere mit dem System (Abb 1 u. 3) . Die Kosten des Systems verhalten sich angesichts der eingesparten Zeit im Operationssaal neutral. Der Ring des Systems hält die Anastomose zuverlässig offen und bietet eine sehr gute Stabilität bei Zugbelastung.

Fazit

Die mikrochirurgische Anastomose mit dem Ring-Pin-System ermöglicht eine erhebliche Zeitersparnis mit allen dadurch bedingten Vorteilen. Wir können das System, das in unserer Klinik derzeit als Standard-Methode Verwendung findet, empfehlen. Die konventionelle Nahttechnik bleibt wegen ihrer universellen Einsatzmöglichkeiten indessen unentbehrlich für jedes mikrochirurgisch orientierte OP-Team.

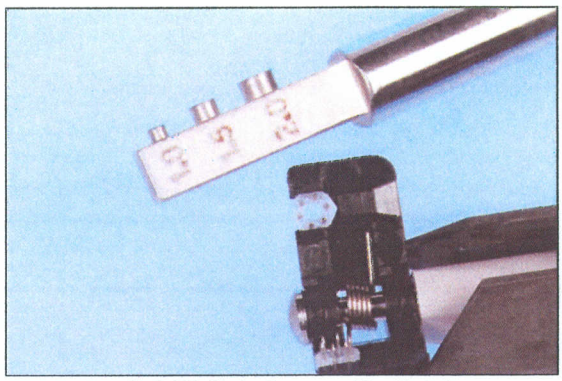

Abb 1 Messleere für Gefäßkaliberbestimmung und Ring-Pin-System

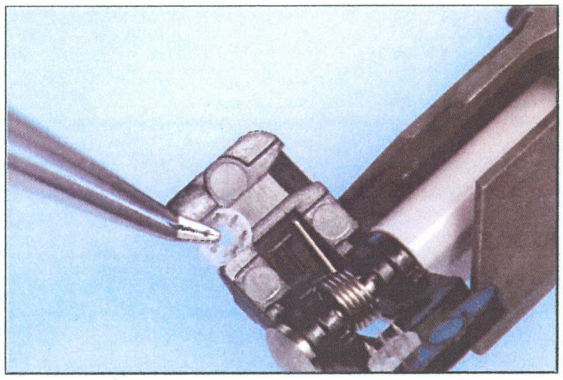

Abb 2 Perforierte Mikropinzette zum Aufschieben der Gefäßwand auf die Pins

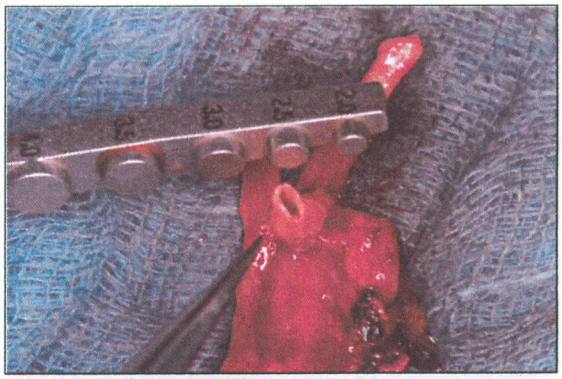

Abb 3 Ausmessen des Gefäßkalibers mit der Messleere

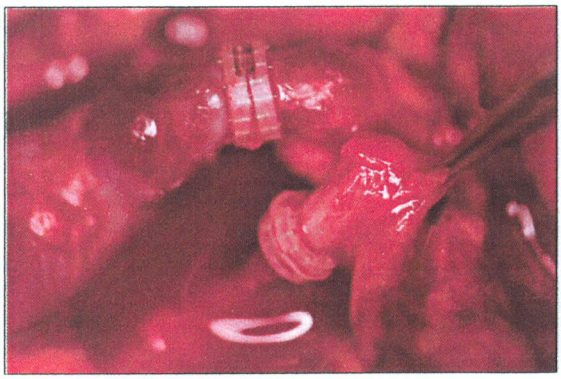

Abb 4 Venöse Mikro-Anastomosen mit 2 und 2,5mm Durchmesser

Literatur

1 Röpke E, Berghaus A, Bloching M (2004) Ring-Pin-Anastomosetechnik - Klinische Langzeit-erfahrungen mit dem mechanischen Ring-Pin-System für mikrovaskuläre Anastomosen in der rekonstruktiven Kopf-Hals-Chirurgie. HNO 52:121-124
2 Falconer DP, Lewis TW, Lamprecht EG, Mendenhall DVM (1996) Evaluation of a microvascular anastomotic device in the dog. J Reconstr Microsurg 6: 215-222
3 Wax MK, Winslow CP, Desyatnikova S, Andersen PE, Cohen J (2000) Microvascular anastomotic device and running suture of venous anastomoses: a longitudinal comparison. Presented at: 5th International Conference on Head and Neck Cancer, July 29-August 2, in San Francisco/CA

Otolaryngology–Head and Neck Surgery (2008) 138, 614-618

ORIGINAL RESEARCH— HEAD AND NECK CANCER

Arterial coupling for microvascular free tissue transfer

Natalya Chernichenko, MD, Douglas A. Ross, MD, Joseph Shin, MD, Jen Y. Chow, MD, Clarence T. Sasaki, MD, and **Stephen Ariyan, MD,**
New Haven, CT

OBJECTIVE: The purpose of this study was to demonstrate the efficacy of arterial coupling.
STUDY DESIGN: Retrospective data were collected in a consecutive series of 124 patients undergoing surgical resection of head and neck tumors followed by free tissue transfer (FTT).
METHODS AND MEASURES: The Unilink coupling device was used to perform arterial and venous anastomosis. Flap survival and thrombosis of the arterial anastomoses were determined.
RESULTS: A total of 124 consecutive patients underwent a total of 127 microvascular FTTs. Reconstruction included 90 radial forearm, 26 fibula, 9 rectus abdominis, and 2 iliac crest myocutaneous free flaps. There were four (3.2%) complications related to arterial insufficiency in our series, three of which were salvageable. There were three (2.4%) flap failures, resulting in an overall free flap survival rate of 97.6 percent.
CONCLUSION: The flap survival with the Unilink Microvascular Anastomotic System is similar to that of standard suture techniques. Use of a coupler device is the preferred method in performing microvascular FTT at our institution.
© 2008 American Academy of Otolaryngology–Head and Neck Surgery Foundation. All rights reserved.

Microvascular free tissue transfers (FTTs) have become a mainstay of reconstruction for many postablative defects resulting from resection of squamous cell carcinomas of the upper aerodigestive tract, salivary gland neoplasms, sarcomas, and primary bone neoplasms as well as defects related to osteoradionectosis, trauma, and facial paralysis.[1] Despite numerous refinements, the microvascular anastomosis remains one of the most technically challenging aspects of FTT reconstructions. Success of FTTs relies on the quality of the microvascular anastomosis; failure can lead to life-threatening flap necrosis, wound breakdown, and fistula formation.

Ever since 1960, when Jacobson and Suarez[2] reported their observation on the use of 7-0 silk to complete carotid artery anastomoses in dogs, the gold standard for performing microvascular anastomoses has been the suture technique. Numerous advancements have been made in the past 4 decades. The operating microscope has been widely used to ensure the patency of microvascular anastomoses. However, the operating microscope can be quite cumbersome, often requiring the patient, surgeon, or assistant surgeon to be in awkward positions when performing intricate repairs. Our group has previously demonstrated that using magnifying loupes rather than operating microscope significantly decreases operative time and cost without a marked change in patency rates.[3]

Anastomotic coupling devices are another technology that has gained popularity in FTTs to the head and neck. Released in 1962, the Nakayama device consisted of 2 metallic rings and 12 interlocking pins with corresponding holes.[4] However, the device did not gain widespread acceptance until 1986, when Östrup and Berggren[5] introduced their modified version as the Unilink Microvascular Anastomotic System (Synovis MCA, Birmingham, AL).

So far, the Unilink coupling device has been accepted for use in end-to-end venous anastomoses for microvascular reconstruction.[6] This device has been shown to have patency rates as high as that seen with sutured anastomoses, while offering the advantage of decreased operative time and ability to accommodate small vessels as well as vessels with size discrepancies.[6,7] However, use of the Unilink coupling device for performing arterial anastomosis has not been widely accepted.

At our institution, we have begun to perform all microvascular FTTs with the Unilink coupling device in the belief that faster, more reliable techniques will further the evolution of head and neck reconstruction. In this retrospective review of the largest series of arterial anastomoses, we demonstrate the feasibility and efficacy of using the coupling device in performing arterial anastomoses in head and neck reconstructions.

METHODS

With Institutional Review Board approval, we undertook a retrospective review of consecutive cases of microsurgical

Received September 4, 2007; revised November 29, 2007; accepted December 20, 2007.

0194-5998/$34.00 © 2008 American Academy of Otolaryngology–Head and Neck Surgery Foundation. All rights reserved.
doi:10.1016/j.otohns.2007.12.029

Downloaded from oto.sagepub.com by guest on December 20, 2011

free flap reconstruction performed at Yale-New Haven Hospital by the Head and Neck Reconstruction team from November 2001 through December 2006. Patients' demographic information, including age, sex, tumor location, type of FTT, length of stay, recipient vessels, and coupling device diameter were collected. Charts were reviewed for free flap failures as well as thrombosis of the arterial anastomoses.

The surgical teams included an ablative team (led by C.T.S.) and a reconstructive team (D.A.R., J.S., and S.A.). The ablative team typically completed surgical extirpation before the start of reconstruction, allowing for the exact extent of the defect to be known before harvesting and fashioning of the donor flap.

One hundred twenty-four consecutive patients underwent a total of 127 microvascular FTTs with the use of the Unilink coupling device. All but three FTTs had a single arterial and two venous anastomoses. We intentionally used two veins so that, if one vein thrombosed, there would still be venous outflow. A total of 127 arterial anastomoses were completed: 124 anastomoses were completed with the use of a coupling device and 3 were hand sewn.

Each reconstruction was performed by the same lead surgeon (D.A.R.), who was assisted by one of two cosurgeons (J.S. or S.A.). Loupes with ×3.5 magnification were used to perform the microanastomoses. The arterial anastomises were performed in the following manner. Flaps were harvested, and both donor and recipient vessels were prepared in the standard fashion. All vessels were dilated with the tips of a curved microneedle holder because its spring-action handle provided increased dilating force compared with the standard vessel dilator. Even after significant dilation, the thicker walls of arteries sometimes remain more resistant to piercing by the coupler pins. Although those arteries with the thickest vessel walls may have appeared to have intimal tearing when mounted on the coupler ring, the vessel ends were generally easily approximated with satisfactory flow. In contrast to the hand-sewn technique, minimal preparation was required before anastomosis. Only nominal removal of vessel adventitia was necessary before mounting vessels on the coupler rings. Following this mechanical dilation, the vessel luminal diameter was measured with a standard vessel-measuring gauge. The vessel ends were mounted on the coupler rings, everting each vessel wall 90 degrees, thus permitting complete visualization of the two lumens. The pins on the rings interlocked with each other to create a secure vascular anastomosis.

All patients were treated with 81 mg/d of aspirin for 2 weeks postoperatively. No intravenous dextran 40 or heparin sodium was used, except during revascularization in those patients with venous thromboses. Patients were kept well hydrated with crystalloid fluids to maintain adequate blood volume and pressure.

The FTTs were monitored every 2 hours for the first 24 hours, then every 3 hours until the third postoperative day, followed by examinations every 6 hours, then every 12 hours, and finally every 24 hours in successive days. Color, turgor, capillary refill, Doppler ultrasonographic findings, pulse palpation, and dermal bleeding to needlestick were used to clinically assess vascular patency.

RESULTS

A total of 127 consecutive free flap reconstructions were performed from November 2001 through December 2006. None of the flaps was excluded from this study. These 127 free flaps were performed on 124 patients. A total of 127 arterial anastomoses were completed: 124 anastomoses were completed with the use of a coupling device and 3 were converted to hand-sewn technique intraoperatively. There were 35 (28%) women and 89 (72%) men. The age of patients at the time of surgery ranged from 41 to 87 years, with the average age being 66 years. Four types of flaps were performed: 90 (71%) radial forearm, 26 (20.4%) fibula, 9 (7%) rectus abdominus, and 2 (1.6%) iliac crest. The reconstructions were for a variety of defects, including anterior skull base, larynx, oral cavity, oropharynx, temporal bone, scalp, skin resurfacing, orbit, cervical esophagus, mandible, and maxilla (Table 1).

Of the 124 coupled arterial anastomoses, the predominant coupler size was 2.5 mm (52%) in diameter. There were three (2.4%) flap failures in our series, resulting in an overall free flap survival rate of 97.6 percent. There were four (3.2%) complications related to arterial insufficiency in our series, three of which were salvageable. Median length of stay was 14 days; the mean was 18 days.

Of the 124 patients, 45 (36%) were postradiation. Of the three flap failures, one patient was postradiation. None of the patients with complications related to salvageable arterial insufficiency received preoperative radiation treatment.

Flap Failures

Patient #1 underwent fibular osseocutaneous free flap reconstruction following composite resection for T4 SCCa oral cavity. The facial artery was anastomosed with the use of a 2.5-mm coupler. The patient showed clinical signs of arterial insufficiency 3 hours postoperatively. He underwent emergent neck exploration with arterial thrombectomy and recoupling using a 3.0-mm coupler. However, on postoperative day 5, the patient again showed signs of flap failure and underwent debridement of the left fibular free flap, followed by right fibular free flap reconstruction. The external carotid artery from the contralateral neck was used to perform end-to-end anastomosis with a 3.0-mm coupler. Postoperatively, the patient did well without any further difficulties. This was the only case of flap failure attributable to arterial insufficiency in our series.

Patient #2 underwent left radial forearm free flap reconstruction following resection of recurrent scalp squamous cell carcinoma. Of importance, the patient previously underwent multiple surgical resections as well as gamma-knife

Downloaded from oto.sagepub.com by guest on December 20, 2011

application. A superficial temporal artery was anastomosed with the use of a 3.0-mm coupler. On postoperative day 2 the patient showed signs of venous outflow insufficiency and was taken to the operating room for exploration. Intraoperatively, both arterial and venous thrombosis was noted. Reanastomosis was attempted; however, no perceivable blood flow was noted across the flap. The flap was therefore removed and the defect reconstructed with local flaps.

Patient #3 underwent radial forearm free flap reconstruction following temporal bone resection for squamous cell carcinoma. The superior thyroid artery was anastomosed with the use of a 2.5-mm coupler. Postoperatively, the patient showed signs of venous congestion; however, the Doppler signal was good initially. At the same time the patient developed respiratory failure requiring prolonged intubation. In light of the patient's tenuous medical status, a flap was monitored clinically. Unfortunately the flap failed and was removed on postoperative day 20. Because of the patient's comorbidities, complicated postoperative course, and predisposition for impaired wound healing, she may have had the same result even following a hand-sewn anastomosis.

Salvageable Complications Related to Arterial Insufficiency

Patient #1 underwent radial forearm free flap microvascular reconstruction following composite resection for T4 SCCa oral cavity. A facial artery was coupled with the use of a 2.5-mm coupler. Unfortunately, the patient showed clinical signs of arterial insufficiency on postoperative day 1. The patient underwent emergent neck exploration. Intraoperatively an arterial thrombus was identified and removed with the use of microvascular techniques under loupe magnification. Good blood flow was noted and vessels were recoupled successfully with a 3.0-mm coupler.

Patient #2 was a steroid-dependent, immunosuppressed renal transplant patient who, on postoperative day 12, had a rupture of the anastomosis, requiring emergent neck exploration and ligation of the bleeding vessel. The coupler was found intact, but the radial artery had torn away from the coupler pins, allowing the superior thyroid artery to bleed into the neck potential space. Fortunately, although the vessel was tied off, adequate neovascularization had taken place, and the FTT was able to survive without its initial donor arterial supply.

Patient #3 was the case of intraoperative thrombosis of a 2.0-mm coupler, requiring resection of the coupler and repeated coupling following further dilation of the vessels to 2.5 mm in diameter. Postoperatively, the patient did well without any further difficulties.

Hand-Sewn Anastomoses

Of the 127 arterial anastomoses performed, 3 were hand sewn. In one patient, a 2.0-mm coupler did not provide adequate flow. In another patient, an adequate splaying of the superior thyroid artery over the pins could not be achieved because of the presence of extensive atherosclerotic plaques. In the third patient, arterial anastomosis was first attempted with 2.5-mm coupler; however, this procedure resulted in formation of a pseudoaneurysm of the medial arterial wall intraoperatively. In all three cases, the vessels were hand sewn without any difficulty.

DISCUSSION

Microvascular FTTs have become a mainstay of reconstruction following oncological resection. They have grown in popularity over the past 20 years, primarily because of advances in techniques and instrumentation as well as more reliable donor sites.[8] The success of reconstruction depends on multiple factors; however, maintaining a patent microvascular anastomosis is of paramount importance.

Use of traditional hand-sewn methods presents with several potential problems. First, inadequate eversion of the vessel may lead to luminal exposure of adventitia, which is highly thrombogenic. In addition, uneven placement of sutures may lead to either anastomotic leak or stasis and increased risk of hematoma or thrombosis, respectively. Finally, unrecognized back-walling of a stitch may cause lumen stenosis and thrombosis. Each of these risks is effectively addressed with the use of the coupler.

When mounted on the coupler rings, each vessel wall is everted 90 degrees, permitting complete visualization of the two lumens. This detailed view of the intima allows accurate and even placement of the vessel wall on the six pins of each coupler ring, thereby eliminating the risk of compromised blood flow secondary to uneven suturing or inadvertent suture placement through the back wall. The male-to-female interlocking design of the couplers, each with 6 pins that insert into the other, serves to hold the anastomosis tightly in place. In addition, the rigid plastic rings form a stent at the site of anastomosis, preventing vessel spasm and thrombosis at a common and important site for both complications. In addition, coupled anastomoses offer a considerable saving of time as well as the ability to accommodate vessels with size discrepancies.[6,7] Finally, histological studies reported by Blair et al[9,10] have shown that postoperative healing following the use of the microvascular coupling device is identical to that of sutured vessels. Moreover, mechanically coupled anastomoses show a 50 percent increase in burst strength 16 weeks after surgery compared with sutured vessels.[11]

Several large series have reported successful use of a microvascular coupling device for creation of end-to-end and end-to-side anastomoses.[7-16] Therefore, use of the Unilink coupling device for venous anastomosis has been widely accepted. However, published experience with coupled arterial anastomoses has been sparse and some results were controversial. For example, Shindo et al[16] have reported a small series of 16 arterial anastomoses following head and neck resection, in which two coupled arteries thrombosed. They concluded that arterial coupling was suboptimal for use in the head and the

Downloaded from oto.sagepub.com by guest on December 20, 2011

neck because the recipient arteries in that region tended to be stiff and thick walled and/or scarred from previous irradiation. Similarly, DeLacure et al[17] described seven attempted arterial anastomoses for head and neck reconstructions with FTTs but abandoned two procedures secondary to perceived vessel wall thickness, impliability, and narrowed lumen diameter. Ahn et al[18] reported intraoperative thrombosis in 5 of 29 arterial anastomoses and no flap failures early in their series. They similarly attributed the failure to technical difficulties in everting thick-walled vessels as well as traumatic tearing of the vessel edge. They later reported a larger series,[19] in which they used a microvascular coupling device in 62 of 80 cases without any flap failures but with 1 return to the operating room for revision of an arterial anastomosis. They concluded that, with proper vessel selection and sufficient experience using a microvascular coupler, arterial coupling may be performed in an expeditious, safe, and reliable fashion with minimal morbidity. However, in their experience conversion to hand-sewn anastomosis is necessary in the following situations: an artery whose walls are too thick (because adequate eversion of vessel edges over the device becomes technically difficult, leading to either intimal injury or significant reduction in intraluminal diameter/flow); donor/recipient arterial luminal diameter discrepancy greater than a 1.5:1 ratio; the presence of nonpliable vessels stiffened by either radiation-induced fibrosis or atherosclerotic calcification; any artery with a luminal diameter less than 1.5 mm.

In our retrospective review of the largest consecutive series of 127 anastomoses, we encountered only 3 (2.4%) flap failures and 4 (3.2%) complications related to arterial insufficiency. All except three anastomoses were accomplished with the use of the Unilink microvascular-coupling device. Our overall free flap survival rate of 97.6 percent compares favorably with the reported success rate of microvascular free flap reconstruction between 95 percent and 97 percent.[20] In our series, there was no significant effect of preoperative radiation on flap failure. Only one of three failed flaps was postradiation. None of the salvageable complications related to arterial insufficiency were postradiation.

Although initially we were concerned with mounting thick and poorly pliable arterial vessel walls to the coupler, we now believe that these types of vessels do not play a role in predicting when an arterial anastomosis should be hand sewn. Our experience has indicated that couplers smaller than 2.5 mm were more likely to restrict blood flow, as was the case in our single intraoperative thrombotic event, in which a 2.0-mm coupler was used. Since that time, we have dilated donor and recipient arteries to accommodate a ring size no smaller than 2.5 mm. We believe that this minimum diameter permits reasonably rapid flow across the anastomosis, preventing the formation of large thrombi and quickly clearing smaller clots. However, even with a coupler size of 2.5 mm, we experienced one postoperative anastomotic thrombosis, which did not recur upon use of a 3.0-mm coupler. We did not encounter any technical difficulties or clinically relevant complications while significantly dilating the donor or recipient arteries. Just how much one can dilate an artery before it ruptures is where clinical experience comes into play. But we cannot overemphasize our zeal in dilating arteries before coupling.

We were also surprised by the lack of influence of traumatic tearing or cracking of the intima on the success of the arterial anastomosis. We commonly witness traumatic tearing and cracking of the intima upon mounting of the artery on the coupler; however, we chose to continue with the coupling and observed that in most cases the anastomosis remained patent and without leakage. In our series of 127 patients, only 4 developed arterial thrombosis. We postulate that anastomotic thromboses secondary to intimal tears were unlikely to occur because the trauma was likely restricted to the areas of eversion, which were approximated to one another and therefore never exposed to blood flow following coupling.

As we have clearly shown in our series, only a few arteries cannot be coupled. We would like to challenge the previously published case series[13,14,18,19] concluding that success of arterial coupling relies on proper vessel selection. We believe that the vast majority of arterial anastomoses can be successfully performed with a coupling device. The decision to convert to hand-sewn anastomosis should be made intraoperatively if coupling fails because of severe atherosclerosis, inability to dilate vessels to a sufficient size, or pseudoaneurysm formation.

CONCLUSION

We have shown that flap survival with the Unilink Microvascular Anastomotic System is similar to that of standard suture techniques. In our experience only a few arteries cannot be coupled. Use of a coupler device, therefore, is preferred over suture anastomosis in performing microvascular FTT at our institution.

AUTHOR INFORMATION

From the Sections of Otolaryngology–Head and Neck Surgery (Drs Chernichenko, Ross, Chow, and Sasaki) and Plastic and Reconstructive Surgery (Drs Shin and Ariyan), Yale University School of Medicine.

This paper was presented as a research forum paper at the Annual Meeting, Washington DC, September 2007.

Corresponding author: Douglas A Ross, MD, Section of Otolaryngology–Head and Neck Surgery, Yale University School of Medicine, 333 Cedar Street, Campus Box 2088041, New Haven, CT 06520-8041.

E-mail address: douglas.ross@yale.edu.

AUTHOR CONTRIBUTIONS

Natalya Chernichenko: study design, data collection, writer; **Douglas A. Ross:** study design, writer, surgical reconstruction; **Joseph Shin:** study

Downloaded from oto.sagepub.com by guest on December 20, 2011

design, surgical reconstruction; **Jen Y. Chow:** study design, data collection, writer; **Clarence T. Sasaki:** surgical resection, study design; **Stephen Ariyan:** surgical reconstruction, study design.

FINANCIAL DISCLOSURE

None.

REFERENCES

1. Smith RB, Sniezek JC, Weed DT, et al. Utilization of free tissue transfer in head and neck surgery. Otolaryngol Head Neck Surg 2007; 137(2):182–91.
2. Jacobson JI, Suarez EL. Microsurgery in anastomosis of small vessels. Surg Forum 1960;11:243–5.
3. Ross DA, Ariyan S, Restifo R, et al. Use of the operating microscope and loupes for head and neck free microvascular tissue transfer: a retrospective comparison. Arch Otolaryngol Head Neck Surg 2003; 129:189–93.
4. Nakayama K, Tamiya T, Yamamoto KS. A simple new apparatus for small vessel anastomosis (free autograft of the sigmoid included). Surgery 1962;52:918–31.
5. Östrup LT, Berggren A. The UNILINK instrument system for fast and safe microvascular anastomosis. Ann Plast Surg 1986;17:521–5.
6. Nakatsuka T, Harii K, Asato H, et al. Analytic review of 2372 free flap transfers for head and neck reconstruction following cancer resection. J Reconstr Microsurg 2003;19:363–8.
7. DeLacure MD, Kuriakose MA, Spies AL. Clinical experience in end-to-side venous anastomoses with a microvascular anastomotic coupling device in head and neck reconstruction, Arch Otolaryngol Head Neck Surg 1999;125:869–72.
8. Urken ML, Weinberg H, Buchbinder D, et al. Microvascular free flaps in head and neck reconstruction: report of 200 cases and review of complications. Arch Otolaryngol Head Neck Surg 1994;120:633–40.
9. Blair WF, Steyers CM, Brown TD, et al. A microvascular anastomotic device, I: a hemodynamic evaluation in rabbit femoral arteries and veins. Microsurgery 1989;10:21–8.
10. Blair WF, Morecraft RJ, Steyers CM, et al. A microvascular anastomotic device, II: a histologic study in arteries and veins. Microsurgery 1989;10:29–39.
11. Gilbert RW, Ragnarsson R, Berggren A, et al. Strength of microvascular anastomoses: comparison between the unilink anastomotic system and sutures. Microsurgery 1989;10:40–6.
12. Berggren A, Ostrup LT, Ragnarsson R. Clinical experience with the Unilink/3M Precise microvascular anastomotic device. Scand J Plast Reconstr Surg Hand Surg 1993;27:35–9.
13. Sasson HN, Stofman GM, Berman P. Clinical use of the 3M 2.5 mm mechanical microcoupling device in free tissue transfer. Microsurgery 1994;15:421–3.
14. Nishimoto S, Hikasa H, Ichino N, et al. Venous anastomoses with a microvascular anastomotic device in head and neck reconstruction. J Reconstr Microsurg 2000;16:553–6.
15. Ross DA, Chow JA, Shin J, et al. Arterial coupling for microvascular free tissue transfer in head and neck reconstruction. Arch Otolaryngol Head Neck Surg 2005;131:891–5.
16. Shindo ML, Costantino PD, Nalbone VP, et al. Use of a mechanical microvascular anastomotic device in head and neck free tissue transfer. Arch Otolaryngol Head Neck Surg 1996;122:529–32.
17. DeLacure MD, Wong RS, Markowitz BL, et al. Clinical experience with a microvascular anastomotic device in head and neck reconstruction. Am J Surg 1995;170:521–3.
18. Ahn CY, Shaw WW, Berns S, et al. Clinical experience with the 3M microvascular coupling anastomotic device in 100 free-tissue transfers. Plast Reconstr Surg 1994;93:1481–4.
19. Spector JA, Draper LB, Ahn CY, et al. Routine use of microvascular coupling device for arterial anastomosis in breast reconstruction. Ann Plast Surg 2006;56:365–8.
20. Genden EM, Rinaldo A, Suarez C, et al. Complications of free flap transfers for head and neck reconstruction following cancer resection. Oral Oncol 2004;40:979–84.

Downloaded from oto.sagepub.com by guest on December 20, 2011

Ref 3012

ORIGINAL ARTICLE

Venous Thrombosis in Coupled Versus Sutured Microvascular Anastomoses

Lok H. Yap, MB, FRCS (Ed), FRCS (Plast), Joannis Constantinides, MBBS, MRCS(Ed),* and Charles E. Butler, MD, FACS†*

Background: The anastomotic coupling device (ACD) is currently used for microsurgical venous anastomoses as an alternative to sutures and can reduce anastomotic time.

Methods: We reviewed the microsurgical procedures performed at the University of Texas M. D. Anderson Cancer Center over a 40-month period. Procedures were performed for elective reconstruction of the breast, head or neck, or extremities after tumor excision. Thrombosis and ultimate flap salvage rates were compared between cases using ACDs and those using sutures for the venous anastomoses.

Results: Seven hundred twenty-three free flaps were included in the study. There were no intraoperative technical complications using the ACD. Overall, the venous thrombosis rates were not significantly different between the ACD (1.4%, 2/139 cases) and sutured (3.3%, 19/584 cases) groups. Salvage rates following venous thrombosis were not significantly different for venous anastomoses performed with an ACD (50%, 1 of 2 cases salvaged) compared with venous anastomoses performed with sutures (68.4%, 13 of 19 cases salvaged).

Conclusion: The ACD is a useful alternative to sutured venous anastomoses that can reduce anastomotic time while achieving similar patency rates.

Key Words: thrombosis, microsurgery, surgical flaps, reconstructive surgical procedures, anastomosis, postoperative complications, vascular surgical procedures, vascular patency

(*Ann Plast Surg* 2006;57: 666–669)

Anastomotic coupling devices (ACDs) have been developed for microsurgical anastomoses as an alternative to traditional hand-sewn anastomoses to reduce the ischemic time in free flap surgery and the anastomotic complication rate. The first microvascular anastomotic device, developed by Nakayama et al[1] in 1962, consisted of 2 metal rings with 12 interlocking pins and holes; this was adapted in 1986 by Östrup and Berggren[2] into the current Unilink (Unilink; 3M, St. Paul, MN) device. The Unilink system consists of gauges for measuring the vessel diameter, high-density polyethylene rings containing 6 stainless steel pins, and the anastomotic device that holds and aligns the rings and approximates the vessel ends for performance of the anastomoses. The rings of the Unilink ACD are available from 1.0 mm to 4.0 mm in diameter, in 0.5-mm increments. The correct ring size is chosen according to the manufacturer's recommendation and vessel-diameter sizing guide.

The Unilink device has been shown to be a safe and efficient alternative to sutures for microsurgical venous anastomoses in clinical practice.[3,4] Zeebregts et al[5] reported a series of 474 anastomoses performed using 1 of 3 different methods—manual sutures, Unilink ACD, or the VCS clip-applier system (Autosuture; United States Surgical Corporation, Norwalk, CT)—and found similar failure rates for sutured and coupled veins. In a series of 50 free flaps for head and neck reconstructions reported recently by Ross et al,[6] both arterial and venous anastomoses were performed using the Unilink ACD, with no failures.

The ACD provides intima-to-intima anastomoses, vessel eversion with no foreign material exposed to the flow surface, and rigid external stenting at the anastomotic site, all of which could potentially reduce the risk of thrombosis compared with traditional suturing. For these reasons, we hypothesized that the venous thrombosis and flap salvage rates using the ACD for venous anastomoses would be similar to or less than rates seen in hand-sewn anastomoses in clinical practice. To confirm our hypothesis, we compared venous thrombosis and flap salvage rates with coupled versus sutured venous anastomoses in cancer patients undergoing tumor excision and reconstruction with free tissue transfer. To our knowledge, this is the largest series directly comparing venous thrombosis and flap salvage rates in coupled verses sutured venous anastomoses in free flap reconstructions.

METHODS

We retrospectively reviewed the medical records of patients who had undergone elective free flap reconstruction after excision of tumors of the breast, head or neck, or extremities at the University of Texas M. D. Anderson Cancer Center over a

Received May 2, 2006, and accepted for publication, after revision, May 17, 2006.

From the *Department of Plastic Surgery, University Hospital Birmingham, Selly Oak Hospital, Birmingham, UK; and the †Department of Plastic Surgery, University of Texas M. D. Anderson Cancer Center, Houston, TX.

Presented in part at the 2004 summer meeting of the British Association of Plastic Surgeons, July 8, 2004.

The authors have neither conflict of interest nor any financial involvement with the product or manufacturer.

Reprints: Charles E. Butler, MD, Department of Plastic Surgery, Unit 443, University of Texas M. D. Anderson Cancer Center, 1515 Holcombe Boulevard, Houston, TX 77030. E-mail: cbutler@mdanderson.org.

Copyright © 2006 by Lippincott Williams & Wilkins

ISSN: 0148-7043/06/5706-0666
DOI: 10.1097/01.sap.0000229958.57126.21

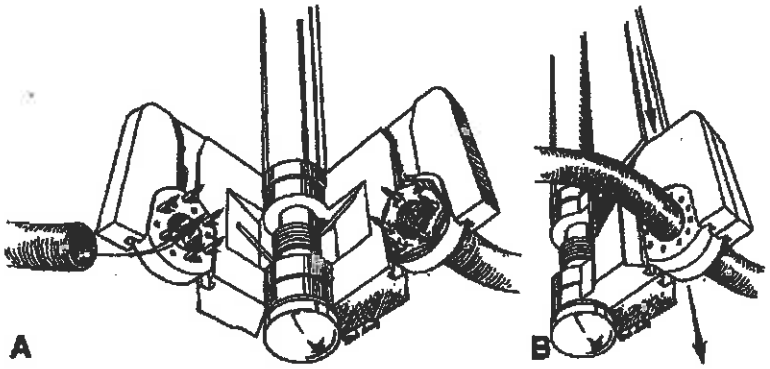

FIGURE 1. A, The ends of the donor and recipient veins are mounted on the ACD rings with their edges everted prior to closing the device. B, The rings are approximated as the device is closed. (Reproduced from Yap LH, Butler CE. Principles of microsurgery. In: Thorne CH, Beasely RW, Aston SJ, et al, eds. *Grabb and Smith's Plastic Surgery*. 6th ed. Philadelphia, PA: Lippincott & Wilkins; 2006. With permission.)

40-month period (January 1, 2001–April 1, 2004). The study was approved by The University of Texas M. D. Anderson Cancer Center institutional review board. All cases were performed by 1 of 14 attending plastic surgeons, with the assistance of a microsurgery fellow. The venous anastomotic techniques, vascular thrombosis rates, flap salvage rates, and surgical outcomes were evaluated from the medical records.

Venous thromboses (those not clearly secondary to arterial thromboses) were identified by evaluation of the clinical situation and operative findings, including reexploration, visualization, and resection of the clot performed at the anastomotic site. Arterial thromboses (n = 13) were not compared in this study since the arterial anastomosis was always sutured. Salvage procedures were considered to be successful if continued flow was achieved through the vessel and complete flap survival or minimal fat and/or edge necrosis was observed.

All venous anastomoses were critical as no parallel hand-sutured venous anastomosis was present when using the ACD device, for the patients included. The determination of which anastomotic technique to use was made by the operating surgeon. The GEM Microvascular Anastomotic Coupler System (Synovis Micro Companies Alliance, Birmingham, AL) was used according to the manufacturer's recommendations. Briefly, after preparation, the 2 vessel ends were placed through the plastic ring with the applicator forceps, everted, and splayed onto the pins (Fig. 1). Care was taken to ensure that the vessel walls were draped evenly over the pins. The vessel ends were approximated by closing the coupler so that the 2 rings were directly apposed and attached by the pins interlocking with the holes of the apposing ring. After a tight fit was assured with forceps or a hemostat, the coupled anastomosis with secured apposing rings was released from the coupling device. Hand-sutured anastomoses were performed with 9/0 nylon sutures.

We determined the rates of venous thrombosis and flap salvage after thrombosis for the patients who had venous anastomosis with the ACD and for patients who had hand-sutured venous anastomosis. Fisher exact test was used to calculate the significance of any difference in thrombosis and salvage rates between the ACD and hand-sutured groups. Values of $P < 0.05$ were considered statistically significant.

RESULTS

Data were collected for 794 patients, and 723 patients were included in the study. Patients included were those who had a microsurgical reconstruction using 1 flap, with 1 critical vein anastomosis performed either using the ACD or sutures. We excluded patients who had 2 flaps for the reconstruction of the same defect (n = 11), those that needed a vein graft (n = 17), patients whose vein anastomosis was not critical (n = 39) (as more than 1 vein was anastomosed for 1 flap), and patients with combinations of the above (n = 4).

The recipient sites were the head or neck in 336 cases, breast in 323, and upper or lower extremity in 64 (Table 1).

TABLE 1. Free Flaps Used in Reconstructions, by Anastomotic Technique

	No. Cases	
Free Flap Used	ACD Group	Sutured Group
Head/neck reconstruction	81	255
Anterolateral thigh	43	48
Rectus abdominis	15	64
Radial forearm	8	53
Latissimus dorsi	6	11
Fibula	2	43
Jejunum	1	19
Lateral thigh	2	9
Other	4	8
Breast reconstruction	53	270
TRAM	46	219
DIEP	6	35
SIEA	1	14
Other	0	2
Extremity reconstruction	5	59
Anterolateral thigh	1	2
Fillet	1	3
Rectus abdominis	1	15
Fibula	0	14
Gracilis	0	11
Radial forearm	1	4
Latissimus dorsi	0	4
Serratus anterior	1	2
Other	0	4

TRAM, transverse rectus abdominis myocutaneous; DIEP, deep inferior epigastric perforator; SIEA, superficial inferior epigastric artery.

© 2006 Lippincott Williams & Wilkins

TABLE 2. Recipient Veins Used in Reconstructions, by Anastomotic Technique

Recipient Vein Used	No. Cases	
	ACD Group	Sutured Group
Head/neck reconstruction	81	255
Facial	31	54
Transverse cervical	16	3
External jugular	10	24
Superficial temporal	14	8
Internal jugular	2	128
Other	8	38
Breast reconstruction	53	270
Internal mammary	33	174
Thoracodorsal	17	83
Internal mammary perforator	3	1
Lateral thoracic	0	4
Other	0	8
Extremity reconstruction	5	59
Greater saphenous	1	2
Femoral	0	9
Anterior tibial	0	10
Posterior tibial	0	8
Brachial	1	5
Other	3	25

The ACD was used in 139 (19.2%) of the 723 free flaps. There were 136 end-to-end and 3 end-to-side venous coupled anastomoses. Table 2 lists the recipient veins used for the reconstructions. No intraoperative complications were reported. Hand suturing was carried out in the remaining 584 cases (80.8%). Of these, 416 were end-to-end anastomoses and 168 were end-to-side.

The ACD was used in 81 (24.1%) of 336 patients undergoing head and neck procedures, 53 (16.4%) of 323 patients undergoing breast reconstruction, and 5 (7.8%) of 64 patients undergoing extremity reconstruction. The internal mammary vein was the most frequently used recipient vein for anastomoses with the ACD (n = 33), followed closely by the facial vein (n = 31). Similarly, the internal mammary vein (n = 174) and the internal jugular vein (n = 128) were the most frequently used for the hand-sutured anastomoses.

Anastomotic time was not specifically quantified for each patient in this retrospective study. In our experience, however, 15–40 minutes were required for a hand-sewn venous anastomosis compared with 5–15 minutes using the ACD.

In the ACD group, there were 2 venous thromboses (1.4%); 1 flap was salvaged (salvage rate, 50%) (Table 3). One thrombosis occurred in a head and neck reconstructive case involving a radial forearm free flap where the internal jugular vein was found to be twisted. Thrombosis occurred early, and the flap was salvaged successfully. The other thrombosis occurred in a breast reconstructive case using a transverse rectus abdominis myocutaneous flap; unfortunately, the flap was not salvageable at surgical exploration 5 days postoperatively. In the hand-sutured group, there were 19 thromboses (3.3%); 13 (68.4%) of the flaps were salvaged (Table 3). There was no significant difference in the thrombosis rates between the ACD and hand-sutured groups.

DISCUSSION

The venous thrombosis rate for venous anastomoses performed with the ACD was low—1.4%—but not significantly lower than the thrombosis rate for the hand-sutured anastomoses: 3.3%. Our analysis also revealed no significant difference in salvage rates between the 2 groups. To attain statistical significance, given such low venous thrombosis rates, a clinical series with a statistical power of 80% would require sample size of 1200 flaps in each group (2-group χ^2 test with a 0.05 2-sided significance level). To our knowledge, the current study is the largest series evaluating venous thrombosis and salvage rates with ACD anastomoses.

Traditional hand-sutured microvascular anastomoses have a patency rate of 95%–98%.[7] The patency rate of 98.7% in our study of 151 coupled anastomoses is in agreement with other studies. Sasson et al[8] showed a 100% patency rate for venous anastomoses performed using the Unilink device in a series of 10 free flap transfers, Sullivan et al[9] demonstrated a 100% patency rate in a series of 27 ACD venous anastomoses, and Berggren et al[10] had a 98% patency rate in 38 critical ACD venous anastomoses. Among studies closer in size to

TABLE 3. Venous Thromboses and Flaps Salvaged, by Anastomotic Technique

Reconstruction Site	No. Cases			
	Total	Venous Thrombosis/Simultaneous Vein and Artery Thrombosis (%)	Flap Salvaged (%)	Flap Lost (%)
ACD group	139	2 (1.4)	1 (50)	1 (50)
Head/neck	81	1 (1.2)	1 (100)	0 (0)
Breast	53	1 (1.9)	0 (0)	1 (100)
Extremity	5	0 (0)	0 (0)	0 (0)
Sutured group	584	19 (3.3)	13 (68.4)	6 (31.5)
Head/neck	255	5 (2)	2 (40)	3 (60)
Breast	270	11 (4.1)	8 (72.7)	3 (27.3)
Extremity	59	3 (5.1)	3 (100)	0 (0)

© 2006 Lippincott Williams & Wilkins

ours, Cope et al[4] found a 99% patency rate using the Unilink device in his review of 99 free flaps (99 venous, 4 arterial anastomoses), and Ahn et al[3] showed a 98.4% success rate in 123 coupled anastomoses.

The potential advantages of using the ACD include shorter anastomotic time and, hence, reduced ischemia time. In our experience, 15–40 minutes was required for venous anastomoses when using sutures compared with 5–15 minutes when using the ACD. This is consistent with previous reports of 10–55 minutes for venous anastomoses using sutures compared with 2–36 minutes for coupled anastomoses.[4,5,10] In addition, coupled anastomoses can withstand greater uniaxial loading/tension than hand-sewn anastomoses, at least for the first 2 weeks.[11]

Specific technical aspects of the coupled anastomotic procedure contribute to speed and accuracy and can allow for anastomoses with moderate vessel-diameter discrepancy. The ACD allows the everted vessel ends to be inspected and errors corrected before approximation and closure of the rings; in contrast, with hand-sutured anastomoses, technical errors and tissue debris may not be visible during completion of the anastomoses. Furthermore, significant venous size discrepancy, which often leads to imperfections in intima apposition when using sutures, can be an indication to use the ACD.[9] Using a ring slightly larger than the diameter of the smaller-caliber vessel (which is transected at a 35° angle) can achieve good intima-to-intima anastomosis with a vein of larger caliber. Thinning of the vein wall can be used to reduce vessel-wall-thickness discrepancies. We also found that anchoring the less mobile, smaller, and/or less accessible vessel to the device first allowed better visualization and maneuverability for safe application of the ACD with a smaller risk of damage to the veins.

Disadvantages of ACD anastomoses include a risk of the vessel twisting during placement onto the ring and trauma to the intima and endothelium during application. The inner diameter of the relaxed and fully dilated smaller-caliber vessel should be approximately 10% larger than the inner diameter of the ring. This would also benefit the flap as it maximizes available flow; however, if too large a ring is chosen, the intima of the vessel wall could be damaged during eversion. A tear at a pin site and premature dislodging of the ring are 2 other potential complications.

This study was nonrandomized and retrospective. Each surgeon was able to choose whether to use sutures or the ACD for his patient, a factor that could have affected the findings. Patients included were all cancer patients undergoing elective reconstructions, and no trauma-related reconstructions or digit replants were included. These findings, therefore, may not apply in those settings. Despite our study being the largest published comparing these 2 anastomotic techniques, the statistical power was insufficient to demonstrate a difference in thrombosis rate if one truly exists. A prospective randomized controlled study will be helpful in determining whether there is truly a lower venous thrombosis rate using the ACD versus hand-sutured anastomoses.

In conclusion, the ACD is an efficient clinical coupling method that achieves patency rates comparable to those of sutured venous anastomoses. It may help reduce anastomotic time and allows a consistent approach to vessel apposition.

REFERENCES

1. Nakayama K, Tamiya T, Yamamoto K, et al. A simple new method for small vessel anastomoses (free autograft of the sigmoid included). *Surgery*. 1962;52:918–931.
2. Östrup LT, Berggren A. The UNILINK instrument system for fast and safe microvascular anastomoses. *Ann Plast Surg*. 1986;17:521–525.
3. Ahn CY, Shaw WW, Berns S, et al. Clinical experience with the 3M microvascular coupling anastomotic device in 100 free-tissue transfers. *Plast Reconstr Surg*. 1994;93:1481–1484.
4. Cope C, Ng RLH, Miller M, et al. Technique and clinical experience of the Unilink/3M® microvascular anastomotic coupling device in free flap surgery. *Internet J Plast Surg*. 2001;1:1.
5. Zeebregts C, Acosta R, Bolander L, et al. Clinical experience with non-penetrating vascular clips in free-flap reconstructions. *Br J Plast Surg*. 2002;55:105–110.
6. Ross DA, Chow JY, Shin J, et al. Arterial coupling for microvascular free tissue transfer in head and neck reconstruction. *Arch Otolaryngol Head Neck Surg*. 2005;131:891–995.
7. Kroll SS, Schusterman MA, Reece GP, et al. Choice of flap and incidence of free flap success. *Plast Reconstr Surg*. 1996;98:459–463.
8. Sasson HN, Stofman GM, Berman P. Clinical use of the 3M 2.5 mm mechanical microcoupling device in free tissue transfer. *Microsurgery*. 1994;15:421–423.
9. Sullivan SK, Dellacroce F, Allen R. Management of significant venous discrepancy with microvascular venous couplet. *J Reconstr Microsurg*. 2003;19:377–380.
10. Berggren A, Östrup LT, Ragnarsson R. Clinical experience with the Unilink/3M microvascular anastomotic device. *Scand J Plast Reconstr Hand Surg*. 1993;27:35–39.
11. Gilbert RW, Ragnarsson R, Berggren A, et al. Strength of microvascular anastomoses: comparison between the UNILINK anastomotic system and sutures. *Microsurgery*. 1989;10:40–46.

© 2006 Lippincott Williams & Wilkins